DISS. ETH NO. 23473

Individual-Level Strategies for the Reconciliation of Work and Nonwork Life: Their Effect on Work-Life Interaction and Well-Being

A thesis submitted to attain the degree of

DOCTOR OF SCIENCES of ETH ZURICH

(Dr. sc. ETH Zurich)

Presented by

ARIANE WEPFER

Lic. phil. Psychologie, Universität Zürich

Born on 27.06.1985

Citizen of Diessenhofen/Frauenfeld

Accepted on the recommendation of

Prof. Dr. Michael Siegrist

PD Dr. med., Dr. PH Georg F. Bauer

Prof. Dr. Tammy D. Allen

2016

Acknowledgements

I would like to thank everyone who has helped me in any way in writing this dissertation. My special thanks go to the following people.

I would like to thank Michael Siegrist and Theo Wehner for their support as my supervisors. Thank you, Michael, for your cooperation and assistance during the past months.

I would like to thank Georg Bauer for affording me the opportunity to write a dissertation in the field of public and organizational health. Thank you for your support and feedback.

I would like to thank Rebecca Brauchli, my daily supervisor, for our many constructive discussions and our shared learning experience. ☺ I also thank Gregor Jenny for his inputs and the many inspiring conversations we had. I thank Oliver Hämmig for his inputs and his support during the past three years.

I would like to thank the rest of the POH team for all those fun and interesting coffee-break conversations and all the times we laughed together.

A big thank you goes to Tammy Allen for welcoming me in your lab at USF, Tampa as a visiting PhD student and for affording me the opportunity to discuss my ideas and increase my skills and knowledge in a motivating academic environment. Thank you also for your support as a co-author, your encouragement and for being a co-examiner on my doctoral committee.

Over the past three years, I had the opportunity to discuss certain aspects of my work with Miki Kacmar, Samantha Ammons and Leslie Hammer. I greatly appreciated their feedback and encouragement.

Further, I would like to thank Julia Schüler, Veronika Job and Sabine Backes who have greatly contributed to my scientific interest and my development as a researcher.

And then, I would like to thank my amazing friends for their emotional support during the past three years. Special thanks go to Flavia, Sammy, Flo, Andrea, Monika, Katharina, Mirjam, Tobias, Guillaume, Nadine and Philippe. A big, big thank you goes to Annemarie, Olivia, Sibylle and my sister Elvira for not only supporting me emotionally, but also reading through some of my manuscripts and providing me with very useful feedback and English grammar checks. ☺

Finally, I would like to thank my parents Rosmarie and Joachim Wepfer-Hänggi for teaching me to believe in myself and for supporting my academic education.

Summary

The effect of work and nonwork characteristics on work-nonwork interaction has long become a popular research topic in occupational health psychology. Work-Nonwork scholars' interest in individual characteristics is comparatively new. Apart from individual differences and demographics, individual-level strategies as predictors of work-life interaction have been investigated. The thesis at hand investigates the implications of employees' individual-level strategies for work-nonwork interaction and health and well-being. The three papers of this thesis address three different individual-level strategies. The first paper investigates part-time work as an adaptive strategy to obtain work-life balance in the face of changing family demands across the life course. The second paper investigates whether job-crafting activities improve work characteristics and thereby reduce work-life conflict and increase well-being over time. The third paper examines the implications of employees' boundary management strategies for recovery and well-being.

The data used in this thesis comes from two sources, a cross-sectional survey study in four large Swiss companies and a panel study with five measurement points among a representative sample of employees from Germany, Switzerland and Austria.

Results suggest that individual-level strategies aimed directly at the work-nonwork interface (adaptive part-time work and boundary management) have an impact on work-nonwork interaction and well-being, while job crafting directed at work characteristics, does not have an indirect effect on work-life conflict.

The thesis contributes to the current understanding of individual-level strategies' role in shaping individuals' experience at the work-nonwork interface. It is concluded that individual-level strategies are valuable when trying to understand how employees address today's challenges of reconciling work and nonwork life.

Zusammenfassung

Der Zusammenhang von Charakteristiken der Arbeit und des Privatlebens mit der Vereinbarkeit von Arbeit und Privatleben ist schon lange ein beliebter Untersuchungsgegenstand der Forschung zu Arbeit und Gesundheit. Das Interesse an Individuellen Unterschieden als Prädiktoren für die Vereinbarkeit ist relativ neu. Neben Persönlichkeitseigenschaften und demographischen Eigenschaften, werden auch individuelle Strategien als Prädiktoren von Vereinbarkeit untersucht. Die vorliegende Dissertation untersucht wie sich individuelle Strategien auf die Vereinbarkeit von Arbeit und Privatleben und auf die Gesundheit und das Wohlbefinden von Arbeitnehmenden auswirken. Die drei Artikel dieser Dissertation untersuchen verschiedene individuelle Strategien. Der erste Artikel untersucht die Bedeutung von Teilzeitarbeit als vereinbarkeitsförderliche, adaptive Strategie zur Vereinbarkeit vor dem Hintergrund sich verändernder Belastungen durch das Privatleben über die Lebensspanne. Der zweite Artikel untersucht, ob sich durch Job Crafting die Arbeitscharakteristika verbessern lassen und dadurch das Wohlbefinden gesteigert und Konflikte zwischen Arbeit und Privatleben über die Zeit vermindert werden können. Der dritte Artikel schliesslich untersucht die Implikationen von Boundary Management Strategien für die Erholung und das Wohlbefinden von Arbeitnehmenden.

Die Daten, die für die Untersuchungen in den drei Artikeln verwendet wurden, stammen aus zwei Datenquellen, einer querschnittlichen Fragebogenstudie in vier grossen Schweizer Unternehmen und einer Längsschnittstudie mit fünf Messzeitpunkten an einer repräsentativen Stichprobe von Deutschen, Schweizer und Österreichischen Arbeitnehmenden.

Die Resultate der drei Studien legen nahe, dass individuelle Strategien die direkt auf die Vereinbarkeit abzielen einen Einfluss auf die Interaktion von Arbeit und Privatleben, sowie das Wohlbefinden haben, während Job Crafting, welches in erster Linie auf Arbeitscharakteristika abzielt und nur indirekt auf Vereinbarkeitskonflikte und Wohlbefinden, keinen Einfluss auf die Vereinbarkeit hat.

Die Dissertation trägt zum Wissen darüber bei wie individuelle Strategien die Vereinbarkeit von Arbeit und Privatleben beeinflussen. Es lässt sich festhalten, dass individuelle Strategien wertvolle Informationen darüber liefern, wie Arbeitnehmende in der heutigen Arbeitswelt der Herausforderung begegnen, Arbeit und Privatleben unter einen Hut zu kriegen.

Content

Acknowledgements ..... **V**

Summary ..... **VII**

Zusammenfassung ..... **VIII**

Content ..... **X**

1. Theoretical background **1**
1.1 Introduction *1*
1.2 A word about terminology *3*
1.3 Concepts that capture the processes and experience at the work-life interface *3*
1.3.1 Negative work-life interaction 4
1.3.2 Positive work-life interaction 5
1.3.3 Work-life balance 6
1.4 Theoretical approaches to work-life dynamics *7*
1.4.1 Role stress hypothesis 7
1.4.2 Role enhancement hypothesis 7
1.4.3 Ecological systems theory 8
1.4.4 Conservation of resources theory 9
1.4.5 Work-home resources model 10
1.4.6 Mechanisms that link the work and nonwork domains 11
1.4.7 Decision-making framework 12
1.4.8 Boundary theory and border theory 13
1.5 Antecedents and outcomes of work-life interaction *14*
1.6 Individual level strategies *16*
1.6.1 Coping 17
1.6.2 Work-family strategies 18
1.6.3 Selection, Optimization and Compensation 20
1.6.4 Boundary management 21

2. Goals and research questions **23**
2.1 Goal of this thesis: *23*
2.2 Research questions of papers *24*
2.2.1 Paper 1: work-time adaptive strategies 24
2.2.2 Paper 2: Job crafting 25
2.2.3 Paper 3: Boundary management 27

3. Method **28**
3.1 Data source A *29*
3.2 Data source B *29*
3.3 Applied methods *30*
3.4 Contribution of the PhD candidate to the three papers *31*

4. Summary of scientific papers **31**
4.1 Summary Paper 1 ..... *31*
4.2 Summary Paper 2 ..... *32*
4.3 Summary Paper 3 ..... *34*

5. Discussion **35**
5.1 Discussion and Contribution of papers and thesis as a whole *35*
5.1.1 Findings and contribution of Paper 1 35
5.1.2 Findings and contribution of Paper 2 37

5.1.3 Findings and contribution of Paper 3 39
5.1.4 Findings and contribution of the thesis as a whole 40
5.2 Strengths and limitations of PhD thesis 41
5.3 Recommendations for future research and practice 43
5.4 Conclusion 44

References 46

Appendix 57
Manuscript Paper 1 59
Manuscript Paper 2 85
Manuscript Paper 3 119

Curriculum Vitae 157

1. Theoretical background

1.1 Introduction

Research on work-life issues first gained momentum due to the influx of women into the workforce (Lewis & Cooper, 1999). The questions that arose were 'how does work influence women's caregiving and household responsibilities?' and 'how do women's caregiving responsibilities influence their work?' (Rantanen, Kinnunen, Mauno, & Tillemann, 2011). As gender role ideologies changed, the focus of work-family research soon broadened to include men and women, parents and non-parents and in some instances also dependents (Westman & Piotrkowski, 1999). By the end of the twentieth century, technological changes had begun to change the timing and the place where work was done (Standen, Daniels, & Lamond, 1999; Westman & Piotrkowski, 1999). This trend has become much stronger in recent years and, together with rising work pressures and growing occupational insecurity in a globalized world, has led to a need for constant availability and to new challenges for combining work and nonwork life (Bianchi & Milkie, 2010; Moen, 2011). Ever changing work environments leading to new work-life challenges call for ongoing updates in the growing field of work-life research (Allen, 2013; Bianchi & Milkie, 2010; Moen, 2011).

Many academic disciplines are interested in work-life dynamics, and there is no consensus concerning the theoretical and methodological approach and key questions in work-life research (Westman & Piotrkowski, 1999). Scholars lament the absence of a unifying theoretical approach and that knowledge is fragmented (Kossek, Baltes, & Matthews, 2011; Westman & Piotrkowski, 1999). Disciplines involved in the study of work-life dynamics include sociology, gender research, family studies, business and management research, public health, industrial/organizational psychology, and, within I/O psychology, occupational health psychology (Bianchi & Milkie, 2010; Geurts & Demerouti, 2003). The thesis at hand applied an occupational health psychology lens to approach the reconcilability of work and nonwork life. The goal of occupational health psychology is to create healthy workplaces that do not

harm workers' nor their families' health and well-being (Quick, 1999). The question that has been addressed most often by occupational health psychologists interested in work-life dynamics is: Which work organizational factors have an impact on employees' and families' health and well-being? (Westman & Piotrkowski, 1999). The thesis at hand follows a newer, more individual-centric perspective (Kossek, Baltes, & Matthews, 2011) by asking: Which *individual-level strategies* for the reconciliation of work and nonwork life can employees use to stay healthy and well in the face of the challenges of today's work environment? By posing this question, the thesis at hand sets the spotlight on individuals' agency in shaping their work-life experience. Individual work-life strategies are of growing importance in today's flexible work environment which calls upon employees' personal responsibility for balancing work and nonwork demands. The research question is addressed in three papers, which focus on different kinds of individual-level strategies for the reconciliation of work and nonwork life. The first paper investigates work-time adaptive strategies to obtain work-life balance in the face of changing family demands across the life course. The second paper investigates whether job-crafting activities (employee-initiated changes in work demands and resources) improve work characteristics and thereby reduce work-life conflict and increase well-being over time. The third paper examines the implications of employees' boundary management strategies for recovery and well-being.

The thesis will first introduce the reader to the work-life field by giving an overview of work-life constructs and theories used to explain the interactions at the work-life interface. A more detailed discussion of existent research on individual-level strategies for the reconciliation of work and nonwork life sets the scene for the summaries of the three research papers, before a discussion concludes the thesis at hand.

1.2 A word about terminology

Many terms have been used when addressing issues arising from participation in work roles and nonwork roles and scholars have debated the advantages and disadvantages of using one over the other (Allen, 2013). The most commonly used term has been 'work-family' due to the fact that participation in paid work and the nuclear family puts the highest demands on individuals (Frone, 2003). Furthermore, the term work-family originated in early scholarly and policy discourses on female labor force participation, childcare and gender equality (Kossek, Valcour, & Lirio, 2014). The term work-family has been criticized as being too narrow (Moen, 2011) by not including nonwork commitments outside the family, such as community work or leisure time activities. The terms work-life or work-nonwork have been suggested as more inclusive of various nonwork roles. Additionally, companies have used the term work-life to avoid backlash from employees without family responsibilities (Kossek et al., 2014). Both terms have been criticized for being unspecific and confounding several nonwork roles, and thereby blurring different experiences at the intersection between work and specific nonwork roles (Frone, 2003). The term work-life has further been criticized for suggesting that work is not part of life (Pitt-catsouphes, Kossek, & Sweet, 2006). Despite this criticism, the terms work-life or work-nonwork are used in this thesis because they are more inclusive than work-family. When reporting existing research results, the terms used in that research are used.

1.3 Concepts that capture the processes and experience at the work-life interface

A range of concepts have been proposed to describe the interactions and related experiences at the work-life interface (Geurts & Demerouti, 2003). In terms of interactions, concepts can be grouped in two broad categories: concepts that capture negative interactions at the work-life interface and concepts that capture positive interactions (Greenhaus & Allen, 2010). Apart

from interactions, the concept of work-life balance has been proposed to describe an overall evaluation of the reconcilability of work and nonwork roles (Greenhaus & Allen, 2010).

1.3.1 Negative work-life interaction

Most research has focused on conflict between work and nonwork domains (Greenhaus & Allen, 2010). Several different but similar constructs (work-family conflict/interference /negative interaction/negative spillover) have been developed out of various theoretical perspectives including boundary theory, compensation theory, ecological system theory, social identity theory, and spillover theory (Demerouti, Peeters, & van der Heijden, 2012; Michel, Mitchelson, Kotrba, LeBreton, & Baltes, 2009). The theoretical approach most often used is role theory (Kahn, Wolfe, Quinn, Snoek, & Rosenthal, 1964). On the basis of role theory, Greenhaus and Beutell (1985) defined work-family conflict as ”a form of inter-role conflict in which the role pressures from the work and family domains are mutually incompatible in some respect” (p. 77). They further distinguished three forms of inter-role conflict. *Time-based conflict* refers to conflict that arises when time devoted to one role makes it difficult to fulfill the obligations of the other role. *Strain-based conflict* occurs when fulfilling the demands of either role uses up energy that would be needed to fulfill the obligations in the other role. *Behavior-based conflict* finally ensues if certain modes of conduct required in one role make it difficult to satisfy behavioral expectations of the other role. Furthermore, directionality has been taken into account (work-to-family and family-to-work) and research has shown that antecedents and outcomes differ by form and direction of conflict (Byron, 2005; Frone, 2003; Greenhaus & Beutell, 1985). Work-to-life conflict has been reported to be more prevalent than life-to-work conflict (Frone, 2003; Geurts & Demerouti, 2003). The thesis at hand uses the term work-life conflict to refer to negative processes between work and nonwork life. The terms work-to-life and life-to-work are used to indicate the directionality of conflict.

1.3.2 Positive work-life interaction

Albeit the focus on negative work-life interactions, there has been increasing interest in the notion that participating in multiple roles can also have positive effects for the individual, his/her role performance and also work and family systems (Greenhaus & Powell, 2006; Greenhaus & ten Brummelhuis, 2013; Voydanoff, 2002). Several concepts that tap into positive work-nonwork synergies such as *work–family enhancement* (Ruderman, Ohlott, Panzer, & King, 2002), *work–family positive spillover* (Hanson, Hammer, & Colton, 2006), *work–family enrichment* (Greenhaus & Powell, 2006) and *work–family facilitation* (Frone, 2003) have been proposed. Work-family enrichment has become the most popular concept and has been defined as "the extent to which experiences in one role can improve the quality of life in the other role" (Greenhaus & Powell, 2006; p. 73). Greenhaus and Powell (2006) argue that participation in several roles can have positive outcomes for individuals in three ways: (1) Satisfaction in each role can have additive effects on overall well-being; (2) participation in different roles can buffer from distress in one role; and (3) positive experiences in one role can produce positive experiences and effects in the other role. This latter mechanism is called *work-family enrichment* because it captures the influence of one role on the other, while the two former mechanisms address the influence of participation in multiple roles on overall well-being and functioning. Greenhaus & Powell (2006) identify two pathways, whereby one role can positively affect the other. Via the *instrumental pathway*, resources acquired in one role (e.g. skills, social capital, money) can be applied to the other role, thereby enhancing positive affect and performance in the receiving role. Positive emotions from participation in one role can be transferred to the other role via the *affective pathway*, thereby enhancing the quality of life in that latter role (Greenhaus & ten Brummelhuis, 2013). A study by Grzywacz and Marks (2000) found family-to-work facilitation to be more prevalent than work-to-family facilitation. The current thesis uses the

term work-life enrichment to refer to positive processes between work and nonwork life; work-to-life and life-to-work enrichment are used to indicate directionality.

1.3.3 Work-life balance

The term work-life balance has been used by researchers and the media for a long time and has typically been equated with low conflict and high enrichment (Frone, 2003). It has often been criticized for being 'fuzzy' (Frone, 2003; Greenhaus & Allen, 2010). But recently scholars have begun to define and conceptualize it as a construct in its own right. There are several definitions; Grzywacz and Carlson, (2007; pp 455) define it as "accomplishment of role-related expectations that are negotiated and shared between an individual and his or her role-related partners in the work and family domains." By emphasizing the accomplishment of role-related expectations, they conceptualize work-family balance as a social construct. A more psychological conceptualization of work-family balance, emphasizing individuals' subjective appraisal, is offered by Greenhaus and Allen (2010). These authors define work-family balance as "an overall appraisal of the extent to which individuals' effectiveness and satisfaction in work and family roles are consistent with their life values at a given point in time" (Greenhaus & Allen, 2010; pp. 174). In contrast to work-family conflict and enrichment, work-family balance is not about causal influence of one domain on the other. Instead it addresses an overall assessment of compatibility of work and non-work roles (Allen & Kiburz, 2012). Several studies have established its incremental validity in the prediction of work and nonwork outcomes alongside conflict and enrichment (Allen, Greenhaus & Edwards, 2010; Carlson, Grzywacz, & Zivnuska, 2009). The thesis at hand uses the term work-life balance instead of alternative terms such as work-family balance or life-domain balance.

1.4 Theoretical approaches to work-life dynamics

To date, there is no commonly recognized theoretical framework that is capable of accommodating all the different strands of work-life research from various academic disciplines. Scholars have often lamented that the field is lacking an overarching theoretical framework (Grzywacz & Marks, 2000). The following section presents a selection of frameworks, models and theories that have been used to explain certain aspects of work-life linkages. Strengths and weaknesses are discussed and where appropriate, the role of the individual and his/her agency in shaping the work-life experience is highlighted.

1.4.1 Role stress hypothesis

Based on role theory (Kahn et al., 1964) and the idea of a work-family role system (Pleck, 1977), Greenhaus and Beutell (1985) conceptualized work-family conflict as a form of inter-role conflict that arises when the demands of the work (family) role are incompatible with the demands of the family (work) role. This conflict approach is based on the idea that resources such as time and energy are finite and scarce (Goode, 1960). Because resources are limited, managing multiple roles inevitably leads to the depletion of these resources which will result in role conflict (Greenhaus & Beutell, 1985). Although the role stress hypothesis is the most commonly used framework for explaining negative work-life interactions, it has been criticized for focusing only on negative work-life interaction and for not clearly identifying underlying processes (Grandey & Cropanzano, 1999; ten Brummelhuis & Bakker, 2012).

1.4.2 Role enhancement hypothesis

Despite an emphasis of research on conflict between work and family roles, several scholars have emphasized that involvement in work and nonwork roles can have beneficial effects for individual well-being, as well as for role performance and domain functioning (Edwards & Rothbard, 2000; Grzywacz & Marks, 2000). The idea of positive work-life interactions is

based on expansion theory, which posits that involvement in several roles can increase the access to resources, which in turn can stimulate personal growth and lead to better domain functioning (Marks, 1977). The role enhancement perspective complements the role stress perspective but fails to provide an integrated framework that accounts for both positive and negative work-life interactions (ten Brummelhuis & Bakker, 2012). Furthermore, both the role stress and role enhancement perspectives only involve the work and nonwork domains and neglect other systems that influence work-life processes such as personality or culture among others (ten Brummelhuis & Bakker, 2012).

1.4.3 Ecological systems theory

Some scholars, pertaining primarily to the family studies tradition (Grzywacz & Marks, 2000; Hill, 2005; Voydanoff, 2002), have used ecological systems theory (Bronfenbrenner, 1986) as a framework for studying the work-nonwork interface. The work and nonwork domains and the individual are seen as microsystems that together form the work-nonwork mesosystem. On the basis of this conceptualization of the work-life interface, relationships between work and nonwork are bidirectional and they can be positive or negative. Work, nonwork and individual characteristics can have additive or interactive effects on the work-life mesosystem. In contrast to the role strain and the role enhancement theory, ecological systems theory can account for positive and negative work-nonwork interactions. Furthermore it broadens the scope of work and nonwork factors that can shape an individual's work-nonwork experience (Hill, 2005). While the role strain and role enhancement theories only explain how one domain affects the other, ecological systems theory also allows to consider how the work-nonwork mesosystem affects other outcomes such as individual wellbeing (Greenhaus & ten Brummelhuis, 2013). However, a major shortcoming of this framework is that it does not specify underlying mechanisms that link the different systems (ten Brummelhuis & Bakker, 2012).

1.4.4 Conservation of resources theory

Grandey and Cropanzano (1999) were the first to propose the use of conservation of resources (COR) theory (Hobfoll, 1989, 2001) as a theoretical framework to guide work-family research. COR theory is a stress theory. It posits that individuals are motivated to acquire and protect resources. Resources can be objects, conditions, personal characteristics, or energies (such as time or money) that are valued by the individual. Stress is experienced when individuals are confronted with actual or potential resource loss or when expected resource gain does not occur (Hobfoll, 1989). When confronted with resource loss, individuals react by protecting resources or by acquiring new ones. To acquire new resources, existing resources need to be invested. Applied to the work-family interface, Grandey and Cropanzano (1999) argue that as conflict is experienced in one domain, fewer resources are left to fulfill one's role in another domain. Therefore, resources are lost in the process of juggling work and nonwork roles, which leads to stress. Stress in turn can lead to dissatisfaction, anxiety, depression and physiological symptoms. If the loss of resources due to role conflict cannot be counteracted, burnout will follow over time (Grandey & Cropanzano, 1999). Similarly, loss cycles (Hobfoll, 2001) can occur: work stressors can result in resource loss that leads to work-nonwork conflict and exhaustion in turn. Exhaustion can result in more work stressors because a lack of resources to prevent further losses will lead to the depletion of further resources (Demerouti, Bakker, & Bulters, 2004).

COR theory has also been used to explain positive work-family interaction. COR theory states that individuals seek to develop a resource surplus when not currently confronted with stressors to accommodate for future losses (Hobfoll, 2001). Innstrand, Langballe, Espnes, Falkum, and Aasland (2008) have argued that work-family facilitation could be seen as a resource surplus, which buffers individuals against future resource loss. Furthermore, COR theory states that individuals who have more resources to start with are more likely to acquire even more resources as compared to individuals with few resources. This can lead to gain

spirals where the acquisition of new resources promotes further resource gains (Hobfoll, 2001). Hakanen, Peeters and Perhoniemi (2011) have applied this to the work-nonwork interface and have argued that domain resources can facilitate the acquirement of more resources in that domain, which in turn leads to work-family enrichment and well-being. This positive state will enable even more resource gains and start a work-life gain spiral. Thus, COR-theory, as opposed to role stress and role enhancement theory, is capable of accounting for both positive and negative work-life interaction and it specifies the underlying mechanism (Grandey & Cropanzano, 1999; ten Brummelhuis & Bakker, 2012).

1.4.5 Work-home resources model

Building on COR-theory and on the ecological systems theory, ten Brummelhuis and Bakker (2012) have recently proposed the work-home resources model (WH-R model). The basic assumption is that demands and resources in one domain lead to outcomes like conflict and enrichment in the other domain via *personal resources*. Personal resources can be *structural* (e.g. skills, knowledge, experience, health) or *volatile* (mood, attention, time, physical or cognitive energy). While structural resources are more durable and can be used several times, volatile resources are fleeting in that they can only be used once or are only temporally available. *Structural personal resources* are the mechanism that links *chronic demands* (e.g. lack of supervisor support) and *structural contextual resources* (e.g. marriage, employment, social network) to *long term* outcomes (e.g. chronic work-life conflict and enrichment). *Volatile personal resources* are the mechanism, which links *temporal demands* (e.g. long work day) and *volatile contextual resources* (e.g. support, advice) to *daily* outcomes (e.g. daily work-life conflict and enrichment). These causal links between domain demands and resources and personal resources are reinforced or buffered by *macro resources* (e.g. culture, social equality) and *key resources* (e.g. self-efficacy, optimism) (ten Brummelhuis & Bakker, 2012). The work-home resources model can be used to explain positive and negative work-

nonwork linkages and it specifies personal resources as the mechanism behind these linkages. Additionally, the model explains how the work and nonwork domains influence each other over time while specifying under which circumstances and for whom influence of one domain on the other is most likely. Empirical evidence for the propositions of the WH-R model has yet to be collected. Unlike most work-life frameworks, the WH-R model includes individual-level characteristics under the term key resources. However, key resources are defined as "personality traits, that enable a more active and efficient coping style" (ten Brummelhuis & Bakker, 2012; pp. 548). They are thought to buffer or reinforce the impact of domain characteristics on personal resources but they are not thought to directly influence domain characteristics or personal resources. Hence, what is missing in the WH-R model is the recognition that individuals are active agent who are motivated to proactively shape their work-life interface (Kreiner, Hollensbe, & Sheep, 2009).

1.4.6 Mechanisms that link the work and nonwork domains

In their seminal article, Edwards and Rothbard (2000) reviewed existing work-family linking mechanisms on the individual level and re-specified them as causal relationships between the work and the nonwork/family domain. They identified six general categories: (1) spillover, (2) compensation, (3) segmentation, (4) resource drain, (5) congruence, and (6) work-family conflict. After reviewing the existent literature on all six categories, they went on and categorized these mechanisms along the dimensions of *sign* (positive, negative or zero), *causal structure of influence* (direct effect, indirect effect or spurious association), and *intentionality* (intentional or unintentional). For the thesis at hand, Edwands and Rothbard's discussion of intentionality, a mostly overlooked issue in work-nonwork linking mechanisms, is of special interest. They noted that intentionality is fundamental to the origin, meaning, and implications of work and family linking mechanisms and that personal intent can moderate the relationship between work and family constructs. Their discussion of intentionality casts

the individual as an active agent who manages his/her work-nonwork interface. While these authors gave an overview and a rich discussion of linking mechanisms, they did not provide a comprehensive, integrated framework for studying work-nonwork interactions. Frone (2003) has argued that all of these mechanisms can operate in parallel and therefore no single one of them provides a useful conceptual framework for understanding work-life dynamics. To date, no theoretical framework has incorporated all of these mechanisms. Most importantly, the issue of intentionality is missing in most work-nonwork frameworks. Notable exceptions hereof are the work-family decision making framework (Greenhaus & Powell, 2012; Powell & Greenhaus, 2010, 2012) and boundary/border theory (Ashforth, Kreiner, & Fugate, 2000; Clark, 2000) which are discussed below.

1.4.7 Decision-making framework

In recent years, a framework for studying how family considerations influence decisions in the work domain has been proposed (Greenhaus & Powell, 2012; Powell & Greenhaus, 2010, 2012). Greenhaus and Powell (2012, p. 247) define the family-relatedness of work decisions as “the extent to which an individual's decision-making process and choice of a course of action in the work domain are influenced by a family situation in order to foster a positive outcome for the family.” They identified three broad categories of work decisions: (1) work role entry (e.g. starting a business, taking a new job); (2) participation (e.g. amount of hours devoted to work); (3) and exit decisions (e.g. quitting a job, retirement) (Powell & Greenhaus, 2010). These authors have discussed the role of sex and gender in such decision-making processes (Powell & Greenhaus, 2010), have provided a framework for studying the family-relatedness of work decisions (Greenhaus & Powell, 2012), and have provided a model of the stages of the decision making process and influencing cognitive factors (Powell & Greenhaus, 2012). Their framework for studying the family relatedness of work decisions claims that factors of the individual, organizational and societal context influence to what extent family

considerations influence work decisions and to what extent work decisions are favorable for the family domain (Greenhaus & Powell, 2012). Research has yet to test if work decisions made in light of family considerations really lead to more favorable family outcomes (Greenhaus & ten Brummelhuis, 2013). Greenhaus and Powell's (2012) decision-making framework centers around the idea that individuals make conscious choices concerning their work/career, which are based on family considerations. Hence, the individual is seen as proactively shaping his/her work-life interface by means of family-related work decisions.

1.4.8 Boundary theory and border theory

Boundary theory (Ashforth et al., 2000) and border theory (Clark, 2000) both conceptualize the work-nonwork interface in terms of boundaries/borders that surround the different life domains. Individuals create, maintain and transition across these domain boundaries/borders with the goal of balancing the demands of the work and nonwork domains (Clark, 2000). The individual strategies for managing the work-nonwork boundaries fall along a segmentation-integration continuum (Allen, Cho, & Meier, 2014; Bulger, Matthews, & Hoffman, 2007). A segmentation strategy is characterized by keeping boundaries inflexible and impermeable. Activities, objects, persons, thoughts and feelings of one domain are not allowed to enter the other domain. Individuals who use a work-to-nonwork segmentation strategy would not, for example, respond to work related calls or emails after hours, discuss work related problems with friends and family members, bring work home or invite work colleagues into their home. At the other end of the continuum, the use of an integration strategy is characterized by flexible and permeable boundaries that allow for activities, objects, persons, thoughts and feelings of one domain to enter the other domain. Individuals who integrate nonwork into work might, for example, respond to personal communications during work hours, bring friends and family members to their workplace, tell work colleagues about their nonwork life and have personal items at their workplace. Boundary management strategies for the work

and nonwork domains can differ according to direction; individuals might integrate work into nonwork while segmenting nonwork from work (Hecht & Allen, 2009). Furthermore, boundary strategies are concerned with different aspects of boundaries such as physical, temporal, psychological and behavioral aspects (Allen et al., 2014; Ammons, 2013). This new approach to conceptualizing the work-nonwork interface has spurred much qualitative and quantitative research into individual-level strategies of managing work and nonwork life (Kreiner et al., 2009). Many new concepts have been developed with considerable overlap (e.g. boundary strategies, boundary enactment, segmentation /integration, role blurring, boundary strength). For a useful overview of existing research and constructs, see Allen et al., (2014). Boundary theory (Ashforth et al., 2000) and border theory (Clark, 2000) center around the individual who actively strives to establish and maintain boundaries around work and nonwork life in order to achieve work-life balance. In contrast to most theoretical approaches to the work-life interface, the boundary/border theory approach focuses on the individual and his/her intentional, agentic role in reconciling work and nonwork life.

1.5 Antecedents and outcomes of work-life interaction

As stated previously, there is no overarching theoretical framework that is capable of accommodating all strands of work-nonwork research from various disciplines. There is not even one commonly recognized framework within occupational health psychology (Westman & Piotrkowski, 1999). Most work-life research in occupational health psychology has focused on predictors and outcomes of work-life conflict and enrichment (Allen, 2013). Antecedents of work-life conflict and enrichment have been classified into three big categories: (1) work and organizational characteristics, (2) nonwork or family characteristics and (3) individual level predictors (Byron, 2005). Individual level predictors can be further categorized into *individual characteristics* (Allen et al., 2012), *demographics* (Byron, 2005), and *individual strategies* (Greenhaus & ten Brummelhuis, 2013). Outcomes of work-life conflict and

enrichment have been classified as (1) work related, (2) nonwork/family related and (3) domain unspecific (Amstad, Meier, Fasel, Elfering, & Semmer, 2011). It has been found that work-to-life and life-to-work conflict are differentially related to predictors and outcomes (Mesmer-Magnus & Viswesvaran, 2005). Work-to-life conflict is more strongly predicted by work and organizational characteristics and life-to-work conflict is more strongly predicted by nonwork characteristics (Byron, 2005). Individual-level predictors were found to relate to both directions of conflict (Allen et al., 2012; Byron, 2005; Michel, Clark, & Jaramillo, 2011; Michel, Kotrba, Mitchelson, Clark, & Baltes, 2011). Work-to-life conflict in turn is more strongly associated with work related outcomes and life-to-work conflict is more predictive of nonwork/family outcomes; both directions of conflict are predictive of domain-unspecific outcomes (Amstad et al., 2011). Much less research exists on predictors and consequences of work-life enrichment or positive spillover. Existing evidence suggests that work characteristics primarily relate to work-to-life enrichment and nonwork characteristics are most predictive of life-to-work enrichment (Crain & Hammer, 2013). Individual-level predictors were found to relate to both directions of enrichment (Michel, Clark, et al., 2011). Work-to-life enrichment was found to be more strongly predictive of work outcomes, while life-to-work enrichment was found to relate more strongly to family outcomes (McNall, Nicklin, & Masuda, 2010; Shockley & Singla, 2011). Both directions of enrichment have been found to be associated with domain-unspecific outcomes (McNall et al., 2010). *Figure 1* depicts the categories of predictors and outcomes of positive and negative work-life interaction as relevant within occupational health psychology. This depiction of the work-life interface will serve as a research framework for the thesis at hand. For the purpose of the thesis at hand, domain-unspecific outcomes have been labeled *individual-level outcomes*.

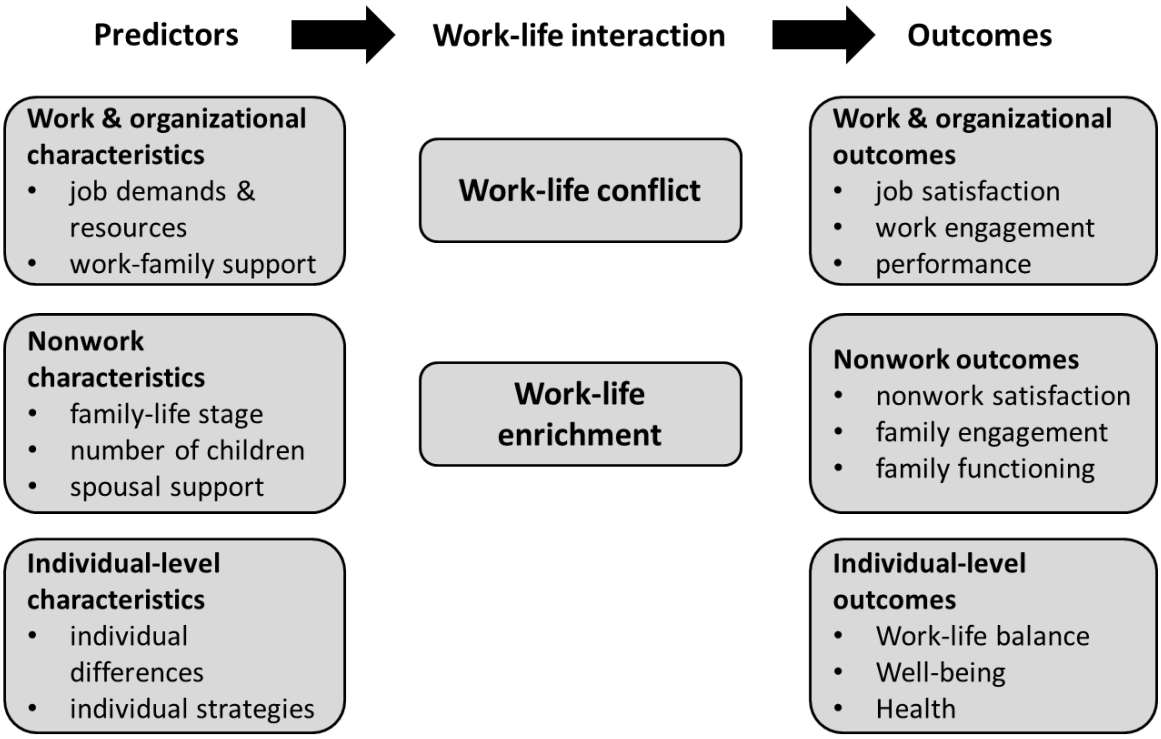

Figure 1. The work-life interface with groups and examples of predictors and groups and examples of outcomes

1.6 Individual level strategies

While there is a lot of research that focuses on work and non-work domain specific predictors, individual-level characteristics as predictors of work-life interaction have received a lot less scholarly attention (Greenhaus & ten Brummelhuis, 2013). Therefore, little is known about why some individuals are better at reconciling work and nonwork domain demands than others (Baltes & Heydens-Gahir, 2003; Kossek et al., 2011; Kreiner et al., 2009). Some research on individual-level determinants of work-life issues has investigated the role of trait-like individual differences, for example the Big Five personality traits (Allen et al., 2012; Michel, Clark, et al., 2011). A second kind of individual level predictors are individual strategies to reconcile work and non-work life (Baltes & Heydens-Gahir, 2003; Kreiner et al., 2009). In terms of a starting point for interventions, individual strategies are more promising than individual differences, because strategies are more malleable than personality traits

(Kossek et al., 2011). Knowledge about individual behavioral strategies is of interest for counselors who are concerned with suggesting successful work-life strategies to clients. It is also of interest to HR professionals who can device policies that support or even encourage employees' use of successful work-life strategies. In the following, existing research on work-life strategies is reviewed before the aims and contribution of this thesis are presented.

1.6.1 Coping

Coping is defined as cognitive and behavioral strategies to meet demands that are appraised as exceeding personal resources (Lazarus & Folkman, 1984). There is only little research on coping and work-nonwork interactions (Eby, Casper, Lockwood, Bordeaux, & Brinley, 2005), and most of it has investigated the buffering effect of coping on the association between work-life conflict and stress and well-being (Aryee, Luk, Leung, & Lo, 1999; Somech & Drach-Zahavy, 2012). Fewer studies have addressed the role of coping strategies in predicting work-life interactions (Somech & Drach-Zahavy, 2012). Among these studies, some have identified work-family specific coping strategies for dealing with role strain of mostly dual career women and men (for an overview see Schnittger & Bird, 1990; Somech & Drach-Zahavy, 2012). Other researchers have investigated the effect of general coping styles (Lazarus & Folkman, 1984), namely problem focused, emotion focused and avoidance coping, on the work-nonwork interaction process (Aryee et al., 1999; Lapierre & Allen, 2006; Mauno & Rantanen, 2012).

The results of studies investigating the effect of general coping (problem focused, emotion focused and avoidance coping) on work-life conflict and enrichment are mixed. Problem focused coping seems to have a beneficial effect on life-to-work conflict, but not work-to-life conflict (Lapierre & Allen, 2006; Rotondo & Kincaid, 2008). This might be explained with higher controllability of the nonwork domain as compared to the work domain (Rotondo & Kincaid, 2008). Problem focused coping has also been related to work-to-family and family-

to-work enrichment (Mauno & Rantanen, 2012; Rotondo & Kincaid, 2008). Emotion focused and avoidance coping has typically been found to be unrelated or positively related to work-to-family and family-to-work conflict (Lapierre & Allen, 2006; Mauno & Rantanen, 2012) and positively to work-to-family and family-to-work enrichment (Mauno & Rantanen, 2012). Studies that have compared the relative explanatory power of contextual factors, such as supervisor or spouse support to the impact of individual level coping have found contextual factors to have a much stronger effect on work-nonwork interactions than individual coping strategies (Lapierre & Allen, 2006; Mauno & Rantanen, 2012).

1.6.2 Work-family strategies

Mainly family scholars and sociologists have investigated how families adapt to the social and institutional constraints they face when trying to reconcile paid work and family obligations. The strategies that families devise when faced with these constraints have been called *family adaptive strategies* (Moen, 1992), *work-family adaptive strategies* (Voydanoff, 2002) or *work-family combination strategies* (Wierda-Boer, Gerris, Vermulst, Malinen, & Anderson, 2009).

Family adaptive strategies allow families to cope with economic, institutional and societal barriers and to achieve economic and social well-being in accordance with cultural values (Moen, 1992). Moen wrote: "'Family adaptive strategy' is a construct with a certain intuitive appeal, bringing the family back in as an active participant in the larger society, an actor responding to, reworking, or reframing external constraints and opportunities" (1992; pp. 234). Strategies that can be used to achieve family goals depend on the cultural context and historical time. They can comprise, among others, the following: Division of paid and unpaid work between partners, delay of childbirth, bearing less children, timing of marriage, labor force entry or exit, migration, changes in needs/changes in consumption patterns, etc. (Moen, 1992).

Voydanoff (2002) conceptualized *work-family adaptive strategies* as linking mechanisms that mediate and moderate the relationship between role strain, role ease and role balance on the one hand and work-family fit on the other hand. Work-family fit in turn is thought to predict favorable work, family and individual outcomes. In addition, she proposed that work-family adaptive strategies have a feedback effect on the work-family interface. Thereby, they can change work and family characteristics and therefore prevent work-family role strain. In this conceptualization, work-family adaptive strategies are predictors and outcomes of role strain, role ease and role balance. Voydanoff (2002) names three types of work-family adaptive strategies: (1) making changes in work or family roles (e.g. leaving the workforce), (2) obtaining support from spouses, and (3) using family-oriented employment policies and programs (e.g. parental leave or part-time work) (Voydanoff, 2002).

The family adaptive strategy investigated most often is the division of paid and unpaid work between spouses and its effectiveness has been assessed by determining its effect on work-family conflict and other indicators of stress and well-being (Moen & Yu, 2000; Wierda-Boer et al., 2009). Moen and Yu (2000) have studied the effectiveness of dual earner couples' work hour strategies in the US. They found that having one or both partners working more than 45 hours per week was associated with high work-life conflict, stress symptoms and overload for both partners. Less strain was reported when both partners worked regular hours (39 – 45 hours) or when one partner, usually the wife, worked reduced hours (<39 hours). Women in couples with one partner working reduced hours experienced the least work-family conflict and overload. A study on *work-family combination strategies* comparing Finnish, Dutch and German Couples with young children found that it was not the couple level division of paid and unpaid work that was most predictive of individuals' work-family conflict, but rather the task specific time investment. Individuals who could devote reasonable amounts of time to both domains experienced the least work-family conflict. The authors concluded that there is "no recipe for a division of paid work and unpaid work between partners that guarantees a

conflict-free reconciliation of work and family", but that policy makers should offer parents the opportunity to adjust the time spent on paid work (Wierda-Boer et al., 2009). In a similar vein, in their editorial note to a Gender, Work and Organization special, titled "Work-life balance: A matter of choice?", Gregory and Milner (2009) conclude that adaptive strategies for achieving work-life balance are limited and that collective rights are needed to back up individual choice.

1.6.3 Selection, Optimization and Compensation

Some scholars have taken a *life management* (Freund & Baltes, 2002) approach in investigating the individual-level antecedents of work-life conflict. Baltes and Heydens-Gahir (2003) have investigated whether the use of behavioral strategies classified as selection, optimization and compensation (Baltes & Baltes, 1990) can reduce work and family demands and thereby decrease work-life conflict. The selection, optimization and compensation (SOC) model posits that developmental challenges can best be met by the coordinated use of three behavioral strategies. *Selection* pertains to the selection of goals and the consequent development and allocation of resources. *Optimization* encompasses strategies for the acquisition, refinement and use of means for goal attainment. *Compensation* strategies finally are concerned with the acquisition and use of means in the face of difficulties or resource loss in the process of goal pursuit, which can be used to maintain a certain target level of functioning. Baltes and Heydens-Gahir (2003) argue that, because individuals who exhibit greater use of SOC strategies are more efficient and successful in the pursuit of their personal goals in the face of limited resources, it can be expected that they also experience less work-life conflict. Indeed they found that participants who reported using SOC strategies in the work domain perceived less work stressors and less work-to-family conflict in turn. Similarly, the use of SOC strategies in the family domain was associated with less family stressors and less family stressors were predictive of less perceived family-to-work conflict. In a

subsequent study Young, Baltes and Pratt (2007) found that the use of SOC strategies was most efficient when employees experienced high demands and lacked support. Specifically, they found that when children were young and when employees had access to few or no family friendly policies, the use of family related SOC strategies was especially successful in decreasing family stressors. Furthermore, they found that employees with little support from supervisors benefit most from using SOC strategies in the work domain to reduce work stressors. Finally, they found that middle-aged employees' (those with the most family responsibilities) use of work (family) related SOC-strategies was more negatively correlated with work (family) stressors than younger and older employees' use of SOC strategies. Taken together, this line of research shows that SOC strategies are effective in diminishing work and family stressors and that they are especially effective for individuals at life stages that are characterized by high pressures in the work and the family domain (Demerouti et al., 2012) and when support from outside is lacking.

1.6.4 Boundary management

As discussed above in the section on boundary/border theory, individuals use integration or segmentation strategies to reconcile work and nonwork demands and achieve work-life balance (Clark, 2000). Empirical research has found integration strategies to be associated with more work-life conflict, more work-life enrichment and less work-life balance when compared to segmentation strategies (Allen et al., 2014). These findings suggest mixed effects of integration strategies on work-life interaction and a negative effect of integration strategies on well-being outcomes.

Apart from integration/segmentation strategies, scholars have investigated *boundary management tactics* (Kreiner et al., 2009), which specify behaviors that individuals use to attain their desired level of integration or segmentation. Kreiner et al. (2009), for example, did a qualitative study with parish priests, a population whose professional demands make

boundary work especially challenging. They identified four dimensions of boundary tactics: behavioral, temporal, physical, and communicative. Behavioral tactics comprise such aspects as using other people's support or leveraging technology to protect ones work-home boundary. Temporal tactics include controlling work time by setting aside blocks of time for work or nonwork purposes and finding respite by removing oneself from work and nonwork demands, for example by going on vacation. Physical tactics are concerned with behaviors such as not taking work mail home or not living next to the workplace. Communicative tactics finally comprise tactics such as communicating expectations and preferences concerning work-nonwork boundaries or confronting boundary violators.

Research on *boundary management styles* (Kossek & Lautsch, 2012) has empirically identified distinct profiles of boundary management. A study by Kossek, Ruderman, Braddy, & Hannum (2012) for example found six boundary management profiles along the dimensions of cross-role interruption behaviors (work-to-family and family-to-work), boundary control and work and family centrality. The six profiles are called work warriors, overwhelmed reactors, family guardians, fusion lovers, dividers, and nonwork-ecletics. Work warriors and overwhelmed reactors are characterized by lower boundary control compared to the other profiles. Low boundary control profiles were associated with less favorable work-family outcomes. Therefore, the authors concluded that feeling in control over work-life boundaries is more consequential for effective work-life management than merely the boundary management styles of integration or segmentation. Together, these qualitative and quantitative approaches to boundary management paint a rich picture of how individuals seek to shape, maintain and protect the boundaries around work and nonwork in order to reconcile work and nonwork demands.

2. Goals and research questions

2.1 Goal of this thesis:

The question that has been addressed most often by occupational health psychologists interested in work-family dynamics is 'which work and organizational factors have an impact on employees' and families' health and well-being?' (Westman & Piotrkowski, 1999). The thesis at hand follows a more individual-centric perspective and asks: Which strategies can individuals use to successfully reconcile work and nonwork life in order to stay healthy and well? *Figure 2* depicts the research model that was used to guide the research underlying the three papers of the thesis at hand. Note that in comparison to *Figure 1*, recovery was added to the center besides work-life conflict and enrichment. Recovery is the process of unwinding after work and replenishing resources that have been taxed during work (Sonnentag & Fritz, 2014). Recovery is usually not labeled an aspect of work-life interaction but it can be argued that it is exactly that. Just as work-life conflict and enrichment, recovery is influenced by work and nonwork characteristics and it has an impact on work and nonwork outcomes (Demerouti, Bakker, Geurts, & Taris, 2009).

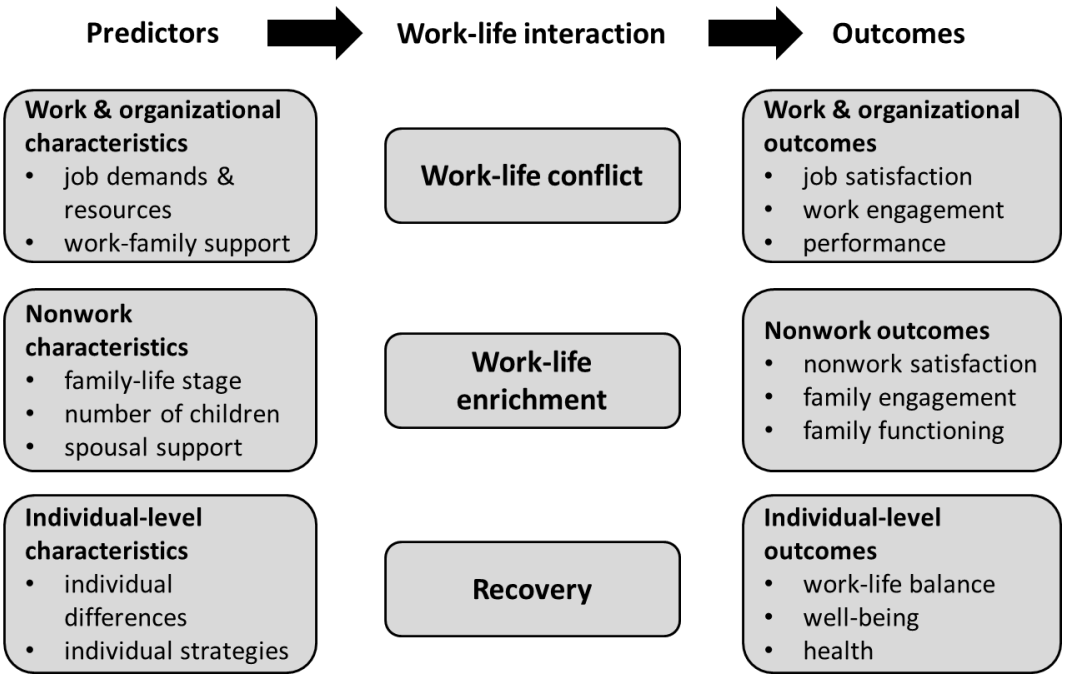

Figure 2. Research model

In three separate papers, three current trends attributable to changes of the work environment and changes of the workforce are addressed. Each paper investigates the impact of an individual-level strategy on work-life interaction and/or well-being. By addressing individual-level strategies, this doctoral thesis aims to further the understanding of how employees deal with current challenges in the work environment with regard to the reconcilability of work and nonwork life. Each of the three papers addresses a different trend in the work environment and the workforce:

- **Paper 1:** The continuing gendered division of paid and unpaid work despite men's and women's wish for more egalitarian arrangements (in Switzerland).
- **Paper 2:** Rising numbers of burnout cases and other stress related health conditions and the need to create healthy work environments to ensure a sustainable workforce.
- **Paper 3:** Blurred boundaries between work and nonwork due to mobile communication technology, the intensification of work and the 24/7 economy.

2.2 Research questions of papers

In the following, the three current trends listed above are linked to the research questions of the respective papers. Each paper addresses the question whether today's work-life challenges that ensue from the above trends can be met by employing certain work-life strategies.

2.2.1 Paper 1: work-time adaptive strategies

Research question of Paper 1: What are the life-stage specific effects of work-time adaptive strategies of men and women on work-life balance in Switzerland?

Gender roles are changing and today's fathers often express a wish to be more involved in childcare and have a more equitable distribution of paid and unpaid work between spouses (Cullen, 2015; Moen, 2011; Wada, Backman, & Forwell, 2014). Furthermore, young workers who belong to the 'Generation Y' place greater importance on work-life balance (Ng,

Schweitzer, & Lyons, 2010). Despite this wish for a more balanced life, most men continue to work full time when they have children, while part-time work is much more common for women with children in most European countries (Anxo & Boulin, 2006; Tomlinson, 2007) and especially in Switzerland. In 2013, 61.8% of mothers with children under 15 worked part time in Switzerland. More than half of these women worked less than 20 hours per week (Swiss Federal Statistical Office, 2013). Hence, the neo-traditional model with men as primary earners and women as secondary earners is the most commonly found work-time adaptive strategy in Switzerland. *Paper1* investigates cross-sectionally how men's and women's adaptive strategy of working part or full time relates to work-life balance across five family-life stages in the Swiss context.

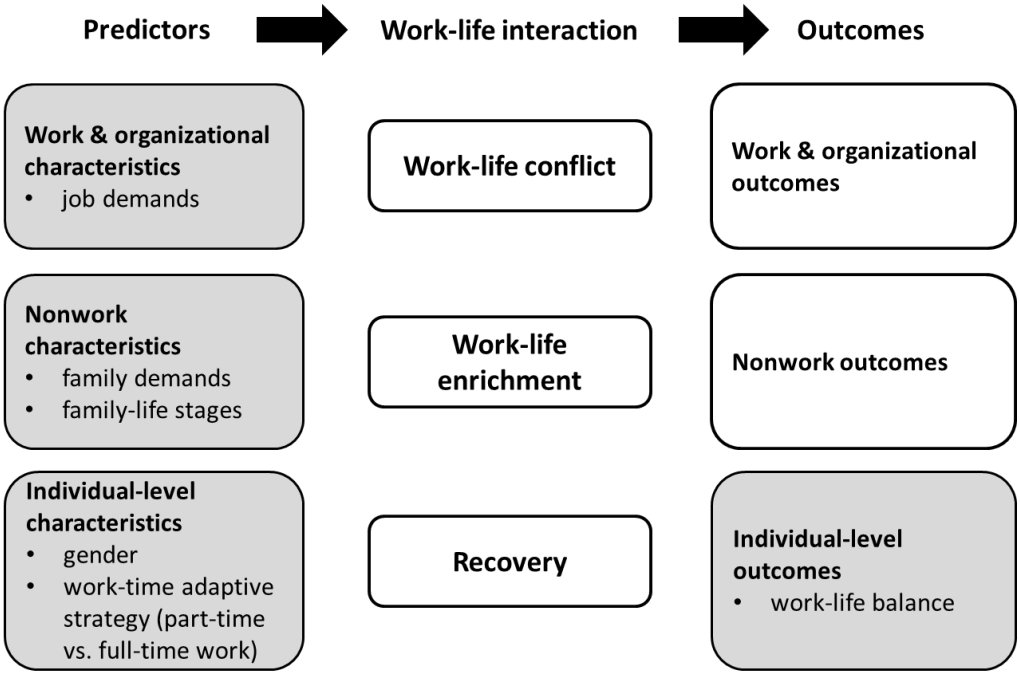

Figure 3. Research model adapted for paper 1

2.2.2 Paper 2: Job crafting

Research question of Paper 2: Does job crafting increase well-being and reduce work-life conflict via increased job resources and decreased job demands?

Rising costs due to long term absences because of stress related physical and mental health conditions have led to the question of how to foster the sustainability of the workforce (Kossek et al., 2014). The need for a sustainable workforce brings concerns for occupational well-being and work-life balance to the forefront (Kossek et al., 2014). Good quality jobs are needed in order to ensure employees' health and work motivation in the long run (Demerouti & Bakker, 2014; Greenhaus & Kossek, 2014). Classic top down job-redesign strategies have brought modest effects in terms of employee motivation and effectiveness given the complexity and fast changes in modern jobs and working conditions (Demerouti & Bakker, 2014; Grant & Parker, 2009). Therefore, organizations and managers increasingly rely on employees to redesign their own jobs in order to achieve maximal fit between their job profile and their skills, needs and preferences (Grant & Parker, 2009; Tims & Bakker, 2010). *Paper 2* examines longitudinally whether job crafting as directed at job demands and resources (Tims & Bakker, 2010) can increase well-being and work-life reconcilability in the sense of reduced work-life conflict.

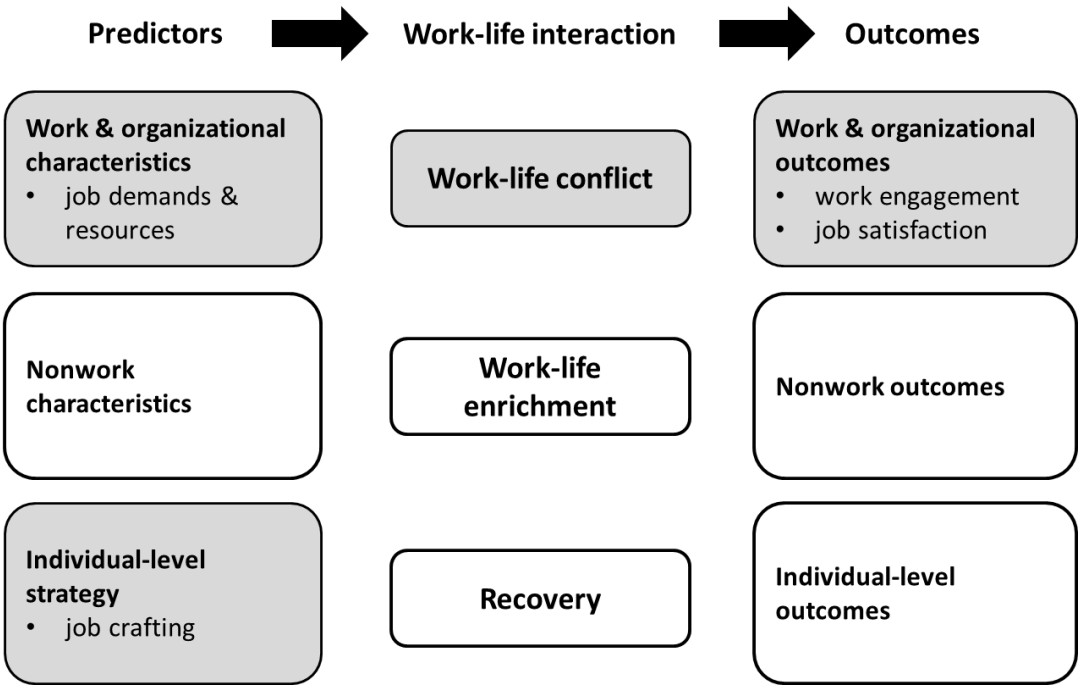

Figure 4. Research model adapted for paper 2

2.2.3 Paper 3: Boundary management

Research question of Paper 3: Does boundary enactment relate to well-being outcomes via recovery activities?

Work has become more flexible in recent years (Fleetwood, 2007). One of the drivers of this development has certainly been the appearance of mobile communication technology, making it possible to work anytime and anywhere (Derks, Duin, Tims, & Bakker, 2015). This new freedom in terms of place and timing of work comes at a cost. On the upside, it allows individuals to craft the work-life balance they desire (Kelly et al., 2014). On the downside, many people feel drained and exhausted due to expectations for constant availability (Derks et al., 2015; Schoneck, 2015). Mobile communication technologies are here to stay, and while organizations are certainly well advised to establish policies that clearly communicate and limit the expectations for availability outside of work hours (Derks et al., 2015), the responsibility is also with the individual employee to self-regulate his/her work-nonwork boundaries and develop strategies that enable him/her to reconcile work and nonwork life (Kossek et al., 2012). *Paper 3* therefore examines cross-sectionally how boundary management strategies affect work-life balance and well-being through their ramifications for individuals' capability to recover from work during time off.

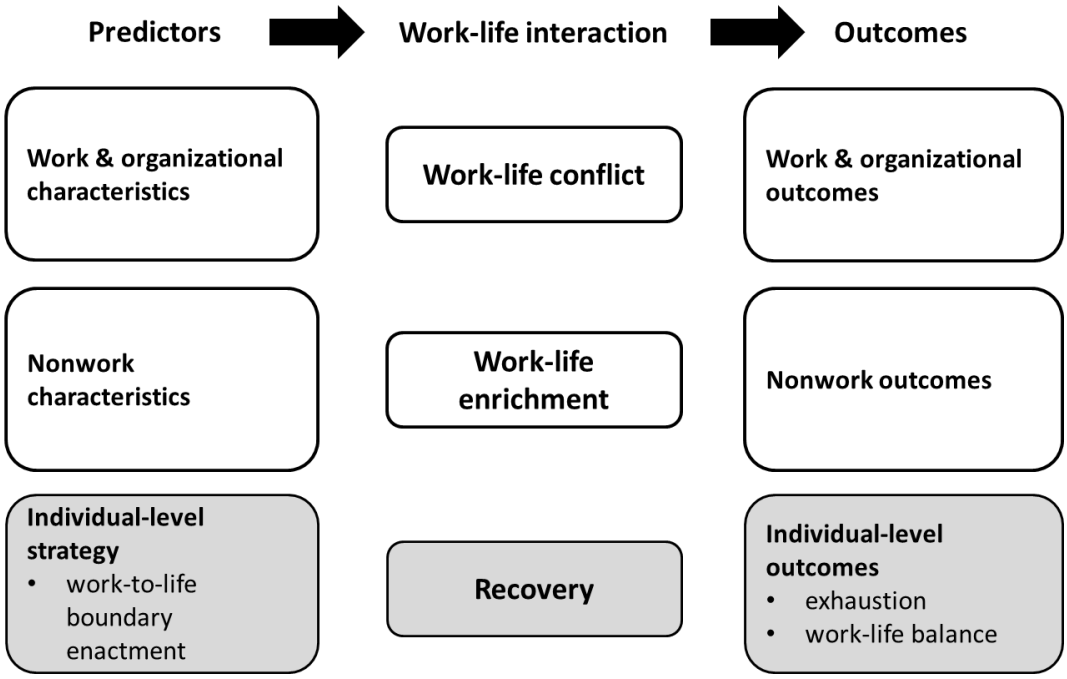

Figure 5. Research model adapted for Paper 3

3. Method

The thesis is a cumulative dissertation comprised of three research papers. Table 1 provides an overview of the three papers concerning authors, title, research question, publication status and data source.

Table 1. Overview of dissertation papers

No.	Title	Authors	Place of (planned) publication	Publication status	Data source
1	The Experience of Work-Life Balance across Family-Life Stages in Switzerland: A Cross-sectional Questionnaire-based Study	Wepfer, A. G. Brauchli, R. Jenny, G. J. Hämmig O. Bauer, G. F.	BMC: Public Health	published	A
2	The long-term Impact of Job Crafting on Job Demands, Job Resources, and Well-Being: A longitudinal mediation Study	Wepfer, A. G. Brauchli, R. Jenny, G. J. Bauer, G. F.	South African Journal of Industrial Psychology	under review	B
3	Work-life boundaries and well-being: Does work-to-life integration impair well-being through lack of recovery?	Wepfer, A. G. Allen, T. D. Brauchli, R. Jenny, G. J. Bauer, G. F.	Journal of Business and Psychology	revised and resubmitted	B

3.1 Data source A

In 2007, a cross-sectional survey study on working conditions, work-life issues and health and well-being was conducted at four large Swiss companies in various sectors: healthcare, banking, insurance, and logistics. As an incentive for participation, the organizations received a comprehensive report about their specific situation. Employees were allowed to fill in the questionnaire (online or paper version) during their working hours and to return it anonymously. Of the 10,889 employees from all job positions and occupational categories who were invited for study participation, data from N = 6,091 (55.94%) could be obtained. The majority of participants were Swiss, had a partner, and were working in the financial sector (banking and insurance: 79%). A subsample of N = 3,664 met inclusion criteria for use in *paper 1*. For details please refer to the method section in paper 1.

3.2 Data source B

From 2013 to 2015, a five-wave panel study was conducted, collecting data on working conditions, work-life issues and health outcomes. The time intervals between measurement points one and two, and two and three were three months. The time interval between wave three and four was six months and wave five data was collected one year after measurement wave four. Participants had to work at least 20 hours per week, not be self-employed, and be in the age range of 18 to 65 years in order to be eligible for study participation. They were contacted via an online panel data service and received a minimal incentive for participation (Voucher points, which can be redeemed towards a given service after participation in several surveys). 1,852 employees completed the t1 measure. These 1,852 employees were invited again for participation in wave two, three and four. Additionally, at t4 new participants were invited for study participation at t4, resulting in an overall sample of N = 1,916 participants, 690 of which had participated in all four measurement waves. All participants of wave four were invited to participate in wave five data collection one year later.

Paper 2 used panel data from t1, t3 and t4. The time lags between each of these measurement points was six months and the sample size was *N* = 690 participants.

In *paper 3*, data from t4 was used. The sample *N* = 1,916 was made up of participants who had participated in previous measurement waves (*N* = 690) and new participants who were surveyed for the first time.

Table 2. Overview of measurement points and number of participants of data source B

t1 (May 2013)	**t2** (t1+3 months)	**t3** (t2+3 months)	**t4** (t3+6 months)	**t5** (t4+12 months)
N = 1852	*N* = 1229	*N* = 940	*N* = 690 +1226 new at t4	*N* = 290 (panel) *N* = 348 (t4+t5)

3.3 Applied methods

Paper 1 used cross-sectional survey data from data source A. The study sample consisted of *N* = 3,664 cases. IBM SPSS 20 was used to prepare and analyze data. Analyzes of variance and multiple linear regression were used to test hypotheses.

Paper 2 used panel data from three measurement points of data source B, specifically t1, t3 and t4 panel data was used. The dataset included *N* = 690 cases. IBM SPSS 20 and AMOS 21 were used to prepare and analyze data. Structural equation modeling techniques were used to answer the research questions.

Paper 3 employed cross sectional survey data from wave 4 of data source B. The study sample was comprised of *N* = 1,916 participants. IBM SPSS 20 and AMOS 21 were used to prepare and analyze data. In order to test the proposed research model, structural equation modeling was used.

3.4 Contribution of the PhD candidate to the three papers

The PhD candidate is the first author of all three papers that make up the dissertation. She was involved in survey development, data collection and preparation of wave 4 in data source B.

Paper 1. The PhD candidate developed the research question, prepared, analyzed and interpreted the data and wrote the manuscript in consultation with the coauthors. She was also involved in the submission and revision process.

Paper 2. The PhD candidate developed the research question, analyzed and interpreted the data and wrote the manuscript. After consultation with the coauthors, she also submitted the manuscript.

Paper 3. The PhD candidate developed the research question together with her coauthors. She developed a scale to measure the independent variable in consultation with her coauthors. She prepared and analyzed the data. Further, she was involved in the interpretation and the writing of the manuscript.

4. Summary of scientific papers

In the following, each paper of the thesis at hand is summarized briefly. The complete manuscripts of the three research papers can be found in the appendix.

4.1 Summary Paper 1

Wepfer, A. G., Brauchli R., Jenny G. J., Hämmig O., Bauer G. F. *The Experience of Work-Life Balance across Family-Life Stages in Switzerland: A Cross-sectional Questionnaire-based Study.* published.

Background: The division of paid and unpaid labor in families continues to be highly gendered in Switzerland with men doing more paid work and women doing more unpaid care and house work. This is especially true for life stages with young children (Swiss Statistics, 2014). Our study investigated the subjective experience of demands in the work and the

nonwork domain and the experience of work-life balance across family-life stages as a consequence of gendered work-time adaptive strategies (working part or full time).

Method: We used data from a survey study on work-life issues and health in four large companies in Switzerland (N = 3,664).

Results: In line with our hypotheses, subjective work and private demands were associated with an interaction of family-life stages and gender. Specifically, during the primary child-rearing family-life stages, women experienced more private demands than men while men experienced more work demands, regardless of level of employment. Furthermore, women who worked part time experienced more work-life balance than women who worked full time during the primary child-rearing family-life stages. They also experienced more work-life balance than men who worked part or full time during the primary child-rearing family-life stages.

Conclusions: Results suggest a gendered work-life experience across the life course (Moen, 2011). The work-life adaptive strategy of working reduced hours is effective for women to achieve good work-life balance. Men's reduced hours are typically much longer than women's and therefore they do not experience the same levels of work-life balance. There is clearly a need for more good quality part-time work for both genders, especially when children are young.

4.2 Summary Paper 2

Wepfer, A. G., Brauchli, R. Jenny, G, J., & Bauer, G. F. *The long-term Impact of Job Crafting on Job Demands, Job Resources, and Well-Being: A longitudinal mediation Study.* Manuscript submitted for publication.

Background: Concerns for a sustainable workforce have raised the question of how to create healthy work environments. Apart from classic top-down job redesign approaches, research has begun to see the individual as an active agent, capable of changing his/her job and work

environment (Grant & Parker, 2009). Tims and Bakker (2010) have conceptualized job crafting as a self-initiated job redesign strategy, which can foster employee well-being by improving work characteristics (job demands and resources). The empirical test of this conceptualization showed mixed findings. Tims, Bakker and Derks (2013) found that crafting resources led to increased structural and social resources and increased well-being. They did not find the respective pattern for crafting demands however. Furthermore, their study design was not optimal for testing mediation longitudinally. Therefore, our study aimed to replicate their study with a design better suited for meditational analysis. Specifically, we tested if job crafting could increase well-being, operationalized as engagement, exhaustion and work-to-life conflict, longitudinally via an increase of job resources and a decrease of job demands.

Method: Data came from a longitudinal online survey study with six-month time intervals between three measurement points. Our sample size was $N = 690$.

Results: Crafting structural and social resources at t1 led to increased structural and social resources at t2. This increase in resources, however, was not predictive of changes in well-being at t3 (engagement, exhaustion, work-life conflict). Crafting structural and social resources at t1 had a direct effect on increased work engagement at t3, though. Crafting structural or social resources at t1 did not decrease exhaustion and work-life conflict at t3. No indirect or direct effects on well-being were found for crafting hindering demands.

Conclusion: Results supported Tims and Bakker's (2010) claim that crafting resources can increase job resources and thereby contribute to healthy work environments. But crafting hindering demands did not decrease hindering job demands over a six month time interval. Further theoretical development and research on crafting demands is needed. Work engagement was the only well-being indicator influenced by job crafting over a one-year period. Exhaustion and work-to-life conflict were not impacted by job crafting or by changes in work characteristics over the time intervals investigated in this study. Therefore, the effect

of job crafting on employee well-being was rather small. Clearly, accompanying measures are needed to increase employee well-being and foster a sustainable workforce.

4.3 Summary Paper 3

Wepfer, A. G., Allen, T. D., Brauchli, R., Jenny, G. J., & Bauer, G. F. *Work-life boundaries and well-being: Does work-to-home integration impair well-being through lack of recovery?* Manuscript submitted for publication.

Background: Mobile communication technology has changed the way we work in terms of timing and place (Derks, ten Brummelhuis, Zecic, & Bakker, 2014). Apart from the opportunities for employees to create the work-life balance they desire (Ammons, 2013), this new development has blurred the boundaries between work and nonwork life and has paved the way for work intrusions on the nonwork sphere, which can create conflict and strain (Kossek, Lautsch, & Eaton, 2006). This study investigates the influence of work-to-life boundary enactment on well-being. Using border/boundary theory (Ashforth, Kreiner, & Fugate, 2000; Clark, 2000) and the effort-recovery model (Meijman & Mulder, 1998), we developed a research model that links work-to-life integration enactment to exhaustion and impaired work-life balance via recovery activities.

Method: The model was tested using structural equation modeling. Data came from a cross-sectional online study and our sample consisted of N = 1916 employees, recruited via an online panel service.

Results: Findings supported our hypotheses. Employees who reported more work-to-life integration enactment felt more exhausted and experienced less work-life balance. Both effects were mediated by recovery activities.

Conclusion: Our study contributes to the existing literature on boundary management by investigating the well-being implications of work-to-life boundary enactment and by suggesting and testing an underlying mechanism. Results show that individual-level boundary

management strategies have implications for employees' capability to recovery from work and for their well-being. Implications for future research and organizational policy are discussed.

5. Discussion

The thesis investigated the role of individual-level strategies for the reconcilability of work and nonwork life in the face of today's challenges in the work environment. Three research papers addressed three different individual-level strategies. Contributions, strengths and limitations and suggestions for future research and practice are discussed before drawing conclusions.

5.1 Discussion and Contribution of papers and thesis as a whole

In the following, the findings and contribution of each paper are first discussed separately before they are integrated and discussed on a superordinate level. For each paper, the findings are presented only briefly. Please refer to the respective paper in the appendix for an in-depth discussion of findings and their theoretical implications.

5.1.1 Findings and contribution of Paper 1

Confronted with high demands in both the work and the private domain during the primary child-rearing family-life stages, couples often cope by focusing on one career - usually the man's (Anxo & Boulin, 2006; Becker & Moen, 1999). While men focus on their work obligations to secure an adequate family income, women typically take primary responsibility for childcare and household chores (Anxo & Boulin, 2006; Becker & Moen, 1999; Bielenski, Bosch, & Wagner, 2002; Bittman & Wajcman, 2000; Hill et al., 2008; Milkie & Peltola, 1999). They reduce their work role commitment by working part time or leaving the workforce all together in order to take care of children and household chores (Becker &

Moen, 1999; Cowan et al., 1985; Martinengo et al., 2010; Phyllis Moen & Roehling, 2005); thereby partly reproducing traditional gender roles (Clarkberg & Moen, 2001; Klammer, 2010; Moen & Sweet, 2004).

In Switzerland, work-time adaptive strategies are highly gendered (Swiss Statistics, 2014). Interestingly, our findings showed that the subjective experience of work and nonwork demands across family-life stages was gendered with men experiencing more work demands and women experiencing more nonwork demands in family-life stages with small children, irrespective of work-time adaptive strategies. This suggests that men and women in Switzerland continue to share responsibility for the work and nonwork domain in rather traditional ways, especially when children are small. Previous studies that have addressed the work-life experience of men and women across family life stages have found similar results. Investigating the interplay of gender and life course, Higgins, Duxbury, and Lee (1994) studied a sample of full-time employed men and women from the general population in Canada. They found that women's experience of the work-life interface is more closely linked to children's ages than men's in the sense that they reported more role overload, work-to-life and life-to-work conflict than men during the primary child-rearing family-life stages. Martinengo et al. (2010) studied a very large international sample of IBM professionals, managers and executives. They found that the experience of work-to-family and family-to-work conflict differed by family-life stage and gender. Specifically, men experienced an increase in work-to-family conflict across the early parenting years and a decrease in later stages of the family-life cycle. This inverted U-shape of men's work-to-family conflict was paralleled by women's experience of family-to-work conflict.

Our findings also showed that, despite similar overall demands for men and women in the work and nonwork domains, women in family-life stages with young children, who employ reduced work-hour strategies, experienced the best work-life balance. Work-life balance therefore seems to be more than the sum of demands.

A gendered distribution of tasks in the work and nonwork domain continues to be the reality of most families in Switzerland. This work-life adaptive strategy is not purely personal choice but strongly related to lifelong socialization processes, societal expectations and institutional forces and opportunities (Anxo & Boulin, 2006; Charles & Harris, 2007; Emslie & Hunt, 2009; Hayes, Schimel, Arndt, & Faucher, 2010; Moen & Chermack, 2005; Shelton & John, 1996). As research and public debates on whether women can and should "have it all" (Slaughter, 2012) and on whether fathers could and should work part time and have (more) parental leave (Covert, 2013) show, there is not much leeway for women and men who try to digress from the neo-traditional model of one career/one (part-time) job (Moen & Yu, 2000). As gender roles and life values are changing in many societies towards more equality and more priority to nonwork life (Brooks & Bolzendahl, 2004; Kanji & Samuel, 2015; Ng et al., 2010; Scott, Alwin, & Braun, 1996; Twenge, 2010), companies and policy makers are well advised to create working conditions that allow employees to choose work-life strategies which are in accordance with their life values, in order to retain qualified staff. More flexibility is sorely needed in terms of schedule control, quality part-time work for both genders but also for the timing of career steps across the life-course (Moen, 2011).

5.1.2 Findings and contribution of Paper 2

This paper investigated whether job crafting, an individual-level strategy for job redesign, could change work characteristics and thereby foster well-being and prevent work-to-life conflict. Our study found that crafting structural and social resources led to an increase in structural and social resources six months later. We also found job crafting directed at structural and social resources to have a positive direct but no indirect effect on work engagement one year later. We did not, however, find job crafting activities directed at resources to predict exhaustion or work-to-life conflict. Job crafting directed at hindering demands neither predicted changes in hindering demands nor changes in well-being. This null

finding for crafting (hindering) demands speaks to a limited influence of the individual employee on health impairing work characteristics. It is therefore important that organizations continue to take responsibility for creating a healthy work environment and implement top-down approaches for protecting employees from health impairing influences. The individual-level job redesign strategies of job crafting seems to be useful in fostering health promoting work characteristics such as structural and social job resources. Approaches that foster job crafting can complement but not replace organizational top-down approaches for job redesign. To our knowledge, our study was the first to investigate the effect of job crafting on work-to-life conflict. By theoretically linking job crafting to work-to-life conflict and empirically testing this link, we contribute to the literature on job crafting and the literature on work-to-life conflict. We did not find any direct or indirect effect of job crafting on work-to-life conflict. We therefore conclude that job crafting is not a successful individual-level strategy for improving the reconcilability of work and nonwork life within the time frame we studied. It is conceivable that job crafting could bring about changes in job characteristics and thereby indirectly reduce work-to-life conflict within shorter time frames, e.g. on a daily level (Petrou, Demerouti, Peeters, Schaufeli, & Hetland, 2012), or when job-crafting activities are undertaken explicitly with the reconcilability of work and nonwork life in mind. More research is needed to elucidate these possibilities.

It might be that job crafting does not have any effect on work-to-life conflict because the latter is more closely linked to demands than to resources (Bakker & Geurts, 2004; Patricia Voydanoff, 2004). However, demands cannot be influenced over longer time intervals by job crafting, as previous studies (Tims et al., 2013) and our own results for crafting hindering demands have shown. This provides a strong argument for the importance of organizational work-life policies and organizations' responsibility in preventing work-to-life conflict to help employees reconcile work and nonwork life and thereby maintain a sustainable workforce.

5.1.3 Findings and contribution of Paper 3

The third research paper of this thesis investigated the well-being implications of individual boundary management strategies. It was hypothesized that employees who integrate work into the nonwork domain find less time for recovery activities and therefore experience impaired well-being. In line with these predictions, we found that work-to-life integration enactment was associated with high exhaustion and low work-life balance. Both effects were mediated by recovery activities. The paper therefore draws attention to the well-being risks of blurred boundaries. Previous studies have shown that control over boundaries is a key factor that determines whether integration has negative effects for the individual (Glavin & Schieman, 2011; Kossek et al., 2006, 2012). Organizations can support employees who pursue integration strategies by giving them control over their work-life boundaries and by changing social norms (Derks et al., 2015). For example, they can implement policies for limiting the expectations for constant availability. This would allow employees to decide whether and when they work during off-job hours. Additionally, their boundary crossing would not be prompted by external stimuli. The German car manufacturer Volkswagen, for example, leveraged technology to stop internal E-mail from being delivered during employee off-job hours ("Volkswagen Agrees to Curb Company E-Mail in Off Hours", 2011). Such measures could help to create an organizational climate that encourages employees to use time off for recovery activities. Flexible working should not be equated with working all the time.

Only few studies have addressed factors that determine individuals' use of segmentation or integration strategies. Previous research has shown that it is partly determined by boundary preferences (Powell & Greenhaus, 2010) and also by job characteristics, such that integration is associated with higher authority, excessive work pressures, schedule control, and decision-making latitude (Glavin & Schieman, 2011). Against the backdrop of ever rising work pressures (Green & McIntosh, 2001; Kelliher & Anderson, 2009) and increasing flexibility through mobile communication technologies (Kossek & Michel, 2010), it is very important to

protect employees from potentially well-being impairing consequences of their boundary management strategies.

5.1.4 Findings and contribution of the thesis as a whole

All three papers address the impact of individual level strategies for the reconcilability of work and nonwork life. While paper 1 (work-time adaptive strategies) and 3 (boundary enactment) address strategies targeted directly at the work-life interface, paper 2 (job crafting) investigates a strategy directed at work characteristics. In contrast to work-time adaptive strategies and boundary enactment, we expected job crafting to have an indirect effect on the work-life interface via altered job characteristics, which in turn impact the work-life interface. We did not find this indirect effect. Consequently, it can be concluded that work-life strategies directly targeted at the work-life interface are more likely to have an effect for the reconcilability of work and nonwork life.

While we found evidence for individual level strategies to have an effect on the reconcilability of work and nonwork, the question remains to what extent these strategies are self-determined. Work-time adaptive strategies are certainly influenced by institutional and economic forces and gender role expectations (Moen & Sweet, 2004). Job crafting is likely to be easier in a work environment that fosters employee initiative and autonomy (Grant & Parker, 2009). Boundary enactment is influenced by social norms such as expectations for availability (Derks et al., 2015). It is important to keep in mind that individual-level strategies do not imply that they are completely self-chosen and therefore the sole responsibility of the individual. Rather, the use of adaptive work-life strategies can be facilitated or hindered by organizational policies and support.

Furthermore, the results from study 2 on job crafting show that the impact of individual-level strategies is limited. It can be concluded that individual-level strategies are limited in their influence on the reconcilability of work and nonwork life. Organizational and policy support

are vital in creating healthy workplaces that foster well-being and facilitate the reconcilability of work and nonwork life.

Nevertheless, the results from the three research papers show that individual-level strategies have an impact on work-life interaction and employee well-being. Therefore, apart from work and nonwork characteristics, individual-level strategies are certainly worth investigating when trying to understand the implications of today's work environment for the reconcilability of work and nonwork life. Furthermore, individual work-life strategies should be incorporated more into frameworks and theoretical models of the work-life interface.

5.2 Strengths and limitations of PhD thesis

Strengths. The PhD thesis has the following strengths.

- The thesis focuses on employee driven work-life strategies and thus casts the individual as an active agent in the process of making sense of the challenges of today's work environment. In the face of today's challenges of the workplace, this individual-centric perspective is a valuable approach to studying work-life issues under an occupational health psychology lens.
- Research in the work-nonwork arena has mainly focused on work and nonwork predictors of work-life interaction so far. The examination of individual-level factors is comparatively new. By focusing on individual-level work-life strategies, this thesis contributes to the knowledgebase on individual-level factors. Practitioners and policy makers can use this knowledge to improve occupational and public health.
- The thesis has investigated and discussed a variety of individual-level strategies for the reconciliation of work and nonwork life. Thus, it illustrates the breadth and potential of individual-level strategies that can be employed. The strategies addressed in the three papers cover approaches that address the quantity of work (work-hour

adaptive strategy), the quality of work (job crafting) and the timing and location of involvement with work (boundary management).

- All three papers used rather big and representative samples of employees to answer the different research questions.
- The thesis at hand makes a couple of theoretical contributions. Paper 2 links job crafting (Tims & Bakker, 2010) to work-life interaction. Paper 3 uses boundary/border theory (Ashforth et al., 2000; Clark, 2000) and the effort-recovery model (Meijman & Mulder, 1998) to link boundary enactment to employee well-being. Furthermore, the thesis as a whole highlights the need to incorporate individual-level work-life strategies into future theory building.

Limitations. There are certain limitations to this PhD thesis.

- The dissertation does not address individual-level strategies for the reconciliation of work and nonwork life in a systematic way. It investigated the effect of three different strategies on different indicators of work-life reconcilability and well-being, but did not compare the effectiveness of different strategies. Therefore, no conclusions can be drawn that directly compare different kinds of strategies.
- None of the three research papers included work and nonwork characteristics as predictors alongside individual-level strategies. Therefore, no comparison could be made concerning the magnitude of the effects of these different types of predictors.
- All three papers used self-report data which raises the risk of common method bias (Podsakoff, MacKenzie, Lee, & Podsakoff, 2003).
- Some of the scales and measures used in the studies showed weaknesses. In paper 1, the measures for work and private demands were single items, which might have compromised the reliability and validity of these variables. In paper 2, two of the three job crafting scales exhibited correlated errors and in paper 3, boundary enactment was measured with a self-developed scale that needs further development and validation.

- There is no overarching theoretical framework that can unify the different studies of the thesis at hand and the thesis does not develop such a framework.

5.3 Recommendations for future research and practice

Research. The following recommendations for future research are derived from the findings of the dissertation papers.

- Future research should employ other sources of data to avoid common method bias. For example, data on work-life interaction could be gathered from spouses and well-being indicators could include biological markers.
- Future research should further develop and validate the boundary enactment scale that was developed for study 3. Furthermore, there is a need for a validated German version of the job crafting scale exempt from correlated error terms of scale items.
- The effects we found in our research should be replicated with samples from different countries and different occupational groups.
- Paper 1 and 3 used cross-sectional data, hence causality cannot be inferred. Future research should replicate the findings from paper 1 and 3 with longitudinal data and study designs. In the case of boundary management, it would be interesting to investigate the dynamics of boundary enactment, recovery and well-being on a daily basis in a diary study.
- Little is known about the degree of self-determination of individual-level strategies and which other factors influence individuals' adoption of strategies to what extent. Future research should address these questions, especially for boundary management, where we know least about determinant factors.
- Future studies should also address the effectiveness of different work-life strategies and compare them in terms of effectiveness for individuals, families and

organizations. It is most likely that different constellations of work, nonwork and individual factors call for different strategies.

Practice. The following recommendations for practice are derived from the findings of the PhD thesis.

- The findings of this thesis show that individual-level work-life strategies need to be backed up by organizational policies and programs. Organizations can contribute to the effectiveness of employees' work-life strategies by providing a supportive context.
- The findings and discussion of paper 1 show that organizations should create more gender equal work-family programs. Good quality part-time jobs (secure, well paid, management positions, etc.) would allow employees to engage in both work and family life while still feeling balanced.
- The findings from paper 3 show that work-to-life integration strategies bear the risk of impaired well-being if employees do not engage in sufficient recovery activities. Employers can support their employees with integration strategies by limiting availability expectations and by giving them control over their work-life boundaries.
- Employees could be coached to develop adaptive work-life strategies that are in line with their personal goals and values. It has been suggested that mindfulness trainings could be used as a technique for supporting employees in the development of individual solutions to their work-life challenges (Allen, 2013).

5.4 Conclusion

The thesis has investigated the role of individual-level strategies for the reconcilability of work and nonwork life and employee well-being. It has been found that individual-level strategies do have an impact on work-life interaction and well-being. Together with work and nonwork characteristics, they shape individuals' work-life experience and influence their health and well-being. Most likely, individual-level strategies are only partly self-determined.

It is important to keep in mind that structural and organizational forces shape, enable or limit employees' use and choice of work-life strategies. Nevertheless, navigating today's constantly changing work environment requires a certain degree of agency. Therefore, individual-level strategies are a valuable perspective when trying to understand how individuals master the challenges of reconciling work and nonwork life.

References

Allen, T. D. (2013). The Work – Family Role Interface: A Synthesis of the Research from Industrial and Organizational Psychology. In N. W. Schmitt, S. I. Highhouse, & I. B. Weiner (Eds.), *Handbook of Psychology, Second Edition* (Second, pp. 698 – 718). Hoboken, NJ, USA: John Wiley & Sons Inc. doi:10.1002/9781118133880.hop212026

Allen, T. D., Cho, E., & Meier, L. L. (2014). Work–Family Boundary Dynamics. *Annual Review of Organizational Psychology and Organizational Behavior*, *1*(1), 99–121. doi:10.1146/annurev-orgpsych-031413-091330

Allen, T. D., Johnson, R. C., Saboe, K. N., Cho, E., Dumani, S., & Evans, S. (2012). Dispositional variables and work–family conflict: A meta-analysis. *Journal of Vocational Behavior*, *80*(1), 17–26. doi:10.1016/j.jvb.2011.04.004

Allen, T. D., & Kiburz, K. M. (2012). Trait mindfulness and work–family balance among working parents: The mediating effects of vitality and sleep quality. *Journal of Vocational Behavior*, *80*(2), 372–379. doi:10.1016/j.jvb.2011.09.002

Ammons, S. K. (2013). Work-family boundary strategies: Stability and alignment between preferred and enacted boundaries. *Journal of Vocational Behavior*, *82*(1), 49–58. doi:10.1016/j.jvb.2012.11.002

Amstad, F. T., Meier, L. L., Fasel, U., Elfering, A., & Semmer, N. K. (2011). A meta-analysis of work-family conflict and various outcomes with a special emphasis on cross-domain versus matching-domain relations. *Journal of Occupational Health Psychology*, *16*(2), 151–69. doi:10.1037/a0022170

Anxo, D., & Boulin, J.-Y. (2006). The Organisation of Time Over the Life Course: European Trends. *European Societies*, *8*(2), 319–341. doi:10.1080/14616690600645175

Aryee, S., Luk, V., Leung, A., & Lo, S. (1999). Role Stressors, Interrole Conflict, and Well-Being: The Moderating Influence of Spousal Support and Coping Behaviors among Employed Parents in Hong Kong. *Journal of Vocational Behavior*, *54*(2), 259–278. doi:10.1006/jvbe.1998.1667

Ashforth, B. E., Kreiner, G. E., & Fugate, M. (2000). All in a day's work: Boundries and micro role transition. *Academy of Management Review*, *25*(3), 472–491. doi:10.5465/AMR.2000.3363315

Bakker, A. B., & Geurts, S. A. E. (2004). Toward a Dual-Process Model of Work-Home Interference. *Work and Occupations*, *31*(3), 345–366. doi:10.1177/0730888404266349

Baltes, B. B., & Heydens-Gahir, H. a. (2003). Reduction of work-family conflict through the use of selection, optimization, and compensation behaviors. *The Journal of Applied Psychology*, *88*(6), 1005–18. doi:10.1037/0021-9010.88.6.1005

Baltes, P. B., & Baltes, M. M. (1990). Psychological perspectives on successful aging: The model of selective optimization with compensation. In P. B. Baltes & M. M. Baltes

(Eds.), *Successful Aging* (pp. 1–34). Cambridge: Cambridge University Press. doi:10.1017/CBO9780511665684.003

Becker, P., & Moen, P. (1999). Scaling Back: Dual-Earner Couples' Work-Family Strategies. *Journal of Marriage and the Family*, *61*(4), 995 – 1007. Retrieved from http://www.jstor.org/stable/10.2307/354019

Bianchi, S. M., & Milkie, M. a. (2010). Work and Family Research in the First Decade of the 21st Century. *Journal of Marriage and Family*, *72*(3), 705–725. doi:10.1111/j.1741-3737.2010.00726.x

Bielenski, H., Bosch, E., & Wagner, A. (2002). *Working time preferences in sixteen European countries*. Dublin. Retrieved from http://www.eurofound.europa.eu/pubdocs/2002/07/en/1/ef0207en.pdf

Bittman, M., & Wajcman, J. (2000). The Rush Hour: The Character of Leisure Time and Gender Equity ". *Social Forces*, *79*(September 2000), 165–189. Retrieved from http://sf.oxfordjournals.org/content/79/1/165.short

Bronfenbrenner, U. (1986). Ecology of the family as a context for human development: Research perspectives. *Developmental Psychology*, *22*(6), 723–742. doi:10.1037/0012-1649.22.6.723

Brooks, C., & Bolzendahl, C. (2004). The transformation of US gender role attitudes: cohort replacement, social-structural change, and ideological learning. *Social Science Research*, *33*(1), 106–133. doi:10.1016/S0049-089X(03)00041-3

Bulger, C. a, Matthews, R. a, & Hoffman, M. E. (2007). Work and personal life boundary management: boundary strength, work/personal life balance, and the segmentation-integration continuum. *Journal of Occupational Health Psychology*, *12*(4), 365–75. doi:10.1037/1076-8998.12.4.365

Byron, K. (2005). A meta-analytic review of work–family conflict and its antecedents. *Journal of Vocational Behavior*, *67*(2), 169–198. doi:10.1016/j.jvb.2004.08.009

Carlson, D. S., Grzywacz, J. G., & Zivnuska, S. (2009). Is work-family balance more than conflict and enrichment? *Human Relations; Studies towards the Integration of the Social Sciences*, *62*(10), 1459. doi:10.1177/0018726709336500

Charles, N., & Harris, C. (2007). Continuity and change in work-life balance choices. *The British Journal of Sociology*, *58*(2), 277–95. doi:10.1111/j.1468-4446.2007.00151.x

Clark, S. C. (2000). Work/Family Border Theory: A New Theory of Work/Family Balance. *Human Relations*, *53*(6), 747–770. doi:10.1177/0018726700536001

Clarkberg, M., & Moen, P. (2001). Understanding the Time-Squeeze: Married Couples' Preferred and Actual Work-Hour Strategies. *American Behavioral Scientist*, *44*(7), 1115–1136. doi:10.1177/0002764201044007005

Covert, B. (2013). Men Want Work-Family Balance, and Policy Should Help Them Achieve

It. *The Nation*, 1–5.

Cowan, C. P., Cowan, P. a., Heming, G., Garrett, E., Coysh, W. S., Curtis-Boles, H., & Boles, a. J. (1985). *Transitions to Parenthood: His, Hers, and Theirs*. *Journal of Family Issues* (Vol. 6). doi:10.1177/019251385006004004

Crain, T. L., & Hammer, L. B. (2013). Work–Family Enrichment: A Systematic Review of Antecedents, Outcomes, and Mechanisms. In *Advances in Positive Organizational Psychology* (Vol. 1, pp. 303–328). Emerald Group Publishing Limited. doi:10.1108/S2046-410X(2013)0000001016

Demerouti, E., & Bakker, A. B. (2014). Job Crafting. In M. C. W. Peeters, J. De Jonge, & T. W. Taris (Eds.), *An Introduction to Contemporary Work Psychology* (1st Ed., pp. 414 – 433). John Wiley & Sons.

Demerouti, E., Bakker, A. B., & Bulters, A. J. (2004). The loss spiral of work pressure, work–home interference and exhaustion: Reciprocal relations in a three-wave study. *Journal of Vocational Behavior*, *64*(1), 131–149. doi:10.1016/S0001-8791(03)00030-7

Demerouti, E., Bakker, A. B., Geurts, S. A. E., & Taris, T. W. (2009). Daily recovery from work-related effort during non-work time. *Research in Occupational Stress and Well Being*, *7*, 85–123. doi:10.1108/S1479-3555(2009)0000007006

Demerouti, E., Peeters, M. C. W., & van der Heijden, B. I. J. M. (2012). Work-family interface from a life and career stage perspective: the role of demands and resources. *International Journal of Psychology*, *47*(4), 241–58. doi:10.1080/00207594.2012.699055

Derks, D., Duin, D. Van, Tims, M., & Bakker, A. B. (2015). Smartphone use and work–home interference: The moderating role of social norms and employee work engagement. *Journal of Occupational and Organizational Psychology*, *88*, 155–177. doi:10.1111/joop.12083

Derks, D., ten Brummelhuis, L. L., Zecic, D., & Bakker, A. B. (2014). Switching on and off … : Does smartphone use obstruct the possibility to engage in recovery activities? *European Journal of Work and Organizational Psychology*, *23*(1), 80 – 90. doi:10.1080/1359432X.2012.711013

Eby, L. T., Casper, W. J., Lockwood, A., Bordeaux, C., & Brinley, A. (2005). Work and family research in IO/OB: Content analysis and review of the literature (1980–2002). *Journal of Vocational Behavior*, *66*(1), 124–197. doi:10.1016/j.jvb.2003.11.003

Edwards, J. R., & Rothbard, N. P. (2000). Mechanisms Linking Work and Family: Clarifying the Relationship between Work and Family Constructs. *The Academy of Management Review*, *25*(1), 178. doi:10.2307/259269

Emslie, C., & Hunt, K. (2009). "Live to Work" or "Work to Live"? A Qualitative Study of Gender and Work-life Balance among Men and Women in Mid-life. *Gender, Work & Organization*, *16*(1), 151–172. doi:10.1111/j.1468-0432.2008.00434.x

Fleetwood, S. (2007). Why work–life balance now? *The International Journal of Human*

Resource Management, *18*(3), 387–400. doi:10.1080/09585190601167441

Freund, A. M., & Baltes, P. B. (2002). Life-management strategies of selection, optimization, and compensation: measurement by self-report and construct validity. *Journal of Personality and Social Psychology*, *82*(4), 642–662. doi:10.1037/0022-3514.82.4.642

Frone, M. R. (2003). Work–family balance. In J. C. Quick & L. E. Tetrick (Eds.), *Handbook of occupational health psychology.* (pp. 143–162). Washington, DC, USA: American Psychological Association. Retrieved from http://scholar.google.com/scholar?hl=en&btnG=Search&q=intitle:Work-Family+Balance#0

Galinsky, E., & Matos, K. (2011). The future of work-life fit. *Organizational Dynamics*, *40*(4), 267–280. doi:10.1016/j.orgdyn.2011.07.004

Geurts, S. A. E., & Demerouti, E. (2003). Work/non-work interface: A review of theories and findings. In M. J. Schabracq, J. A. Winnubst, & C. L. Cooper (Eds.), *The handbook of work and health psychology* (2nd ed., pp. 279 – 312). Sussex: John Wiley & Sons Ltd.

Glavin, P., & Schieman, S. (2011). Work-Family Role Blurring and Work-Family Conflict: The Moderating Influence of Job Resources and Job Demands. *Work and Occupations*, *39*(1), 71–98. doi:10.1177/0730888411406295

Goode, W. J. (1960). A Theory of Role Strain. *American Sociological Review*, *25*(4), 483. doi:10.2307/2092933

Grandey, A. A., & Cropanzano, R. (1999). The Conservation of Resources Model Applied to Work–Family Conflict and Strain. *Journal of Vocational Behavior*, *54*(2), 350–370. doi:10.1006/jvbe.1998.1666

Grant, A. M., & Parker, S. K. (2009). Redesigning Work Design Theories: The Rise of Relational and Proactive Perspectives. *The Academy of Management Annals*, *3*(1), 317–375. doi:10.1080/19416520903047327

Green, F., & McIntosh, S. (2001). The intensification of work in Europe. *Labour Economics*, *8*, 291–308. Retrieved from http://www.sciencedirect.com/science/article/pii/S0927537101000276

Greenhaus, J., & Allen, T. (2010). Work-Family Balance: A Review and Extension of the Literature. In J. Campbell Quick & L. E. Tetrick (Eds.), *Handbook of occupational health psychology* (2nd ed., pp. 156 – 183). Washington, DC, USA: American Psychological Association. Retrieved from http://scholar.google.com/scholar?hl=en&btnG=Search&q=intitle:Work-Family+Balance:+A+Review+and+Extension+of+the+Literature#0

Greenhaus, J. H., & Beutell, N. J. (1985). Sources of Conflict Between Work and Family Roles. *Academy of Management Review*, *10*(1), 76–88. doi:10.5465/AMR.1985.4277352

Greenhaus, J. H., & Kossek, E. E. (2014). The Contemporary Career: A Work–Home Perspective. *Annual Review of Organizational Psychology and Organizational Behavior*,

1, 361–388. doi:10.1146/annurev-orgpsych-031413-091324

Greenhaus, J. H., & Powell, G. N. (2006). When Work and Family Are Allies: a Theory of Work-Family Enrichment. *Academy of Management Review*, *31*(1), 72–92. doi:10.5465/AMR.2006.19379625

Greenhaus, J. H., & Powell, G. N. (2012). The family-relatedness of work decisions: A framework and agenda for theory and research. *Journal of Vocational Behavior*, *80*(2), 246–255. doi:10.1016/j.jvb.2011.12.007

Greenhaus, J. H., & ten Brummelhuis, L. L. (2013). Models and frameworks underlying work-life research. In D. A. Major, R. Burke, D. A. (Ed) Major, & R. (Ed) Burke (Eds.), *Handbook of work–life integration among professionals: Challenges and opportunities.* (pp. 14–34). Northampton, MA, US: Edward Elgar Publishing. doi:10.4337/9781781009291.00010

Gregory, A., & Milner, S. (2009). Editorial: Work-life Balance: A Matter of Choice? *Gender, Work & Organization*, *16*(1), 1–13. doi:10.1111/j.1468-0432.2008.00429.x

Grzywacz, J. G., & Carlson, D. S. (2007). Conceptualizing Work Family Balance: Implications for Practice and Research. *Advances in Developing Human Resources*, *9*(4), 455–471. doi:10.1177/1523422307305487

Grzywacz, J. G., & Marks, N. F. (2000). Reconceptualizing the work-family interface: an ecological perspective on the correlates of positive and negative spillover between work and family. *Journal of Occupational Health Psychology*, *5*(1), 111–26. Retrieved from http://www.ncbi.nlm.nih.gov/pubmed/10658890

Hakanen, J. J., Peeters, M. C. W., & Perhoniemi, R. (2011). Enrichment processes and gain spirals at work and at home: A 3-year cross-lagged panel study. *Journal of Occupational and Organizational Psychology*, *84*(1), 8–30. doi:10.1111/j.2044-8325.2010.02014.x

Hanson, G. C., Hammer, L. B., & Colton, C. L. (2006). Development and validation of a multidimensional scale of perceived work-family positive spillover. *Journal of Occupational Health Psychology*, *11*(3), 249–65. doi:10.1037/1076-8998.11.3.249

Hayes, J., Schimel, J., Arndt, J., & Faucher, E. H. (2010). A theoretical and empirical review of the death-thought accessibility concept in terror management research. *Psychological Bulletin*, *136*(5), 699–739. doi:10.1037/a0020524

Hecht, T. D., & Allen, N. J. (2009). A longitudinal examination of the work – nonwork boundary strength construct. *Journal of Organizational Behavior*, *30*(7), 839–862. doi:10.1002/job

Higgins, C., Duxbury, L., & Lee, C. (1994). Impact of Life-Cycle Stage and Gender on the Ability to Balance Work and Family Responsibilities. *Family Relations*, *43*(2), 144. doi:10.2307/585316

Hill, E. J. (2005). Work-Family Facilitation and Conflict, Working Fathers and Mothers, Work-Family Stressors and Support. *Journal of Family Issues*, *26*(6), 793–819.

doi:10.1177/0192513X05277542

Hill, J. E., Jacob, J. I., Shannon, L. L., Brennan, R. T., Blanchard, V. L., & Martinengo, G. (2008). Exploring the relationship of workplace flexibility, gender, and life stage to family-to-work conflict, and stress and burnout. *Community, Work & Family*, *11*(2), 165–181. doi:10.1080/13668800802027564

Hobfoll, S. E. (1989). Conservation of resources: A new attempt at conceptualizing stress. *American Psychologist*, *44*(3), 513–524. doi:10.1037//0003-066X.44.3.513

Hobfoll, S. E. (2001). The Influence of Culture, Community, and the Nested-Self in the Stress Process: Advancing Conservation of Resources Theory. *Applied Psychology*, *50*(3), 337–421. doi:10.1111/1464-0597.00062

Kahn, R. L., Wolfe, D. M., Quinn, R. P., Snoek, J. D., & Rosenthal, R. A. (1964). *Organizational stress: Studies in role conflict and ambiguity.* Oxford, England: John Wiley. Retrieved from http://search.ebscohost.com/login.aspx?direct=true&db=psyh&AN=1965-08866-000&site=ehost-live

Kanji, S., & Samuel, R. (2015). Male Breadwinning Revisited: How Specialisation, Gender Role Attitudes and Work Characteristics Affect Overwork and Underwork in Europe. *Sociology*. doi:10.1177/0038038515596895

Kelliher, C., & Anderson, D. (2009). Doing more with less? Flexible working practices and the intensification of work. *Human Relations*, *63*(1), 83–106. doi:10.1177/0018726709349199

Kelly, E. L., Moen, P., Oakes, J. M., Fan, W., Okechukwu, C., Davis, K. D., … Casper, L. M. (2014). Changing Work and Work-Family Conflict: Evidence from the Work, Family, and Health Network. *American Sociological Review*, *79*(3), 485–516. doi:10.1177/0003122414531435

Klammer, U. (2010). The "Rush Hour" of Life: Insecurities and Strains in Early Life Phases as a Challenge for a Life Course-Oriented, Sustainable Social Policy. In J. Tremmel (Ed.), *A Young Generation Under Pressure?* Berlin, Heidelberg: Springer Berlin Heidelberg. doi:10.1007/978-3-642-03483-1

Kossek, E. E., Baltes, B. B., & Matthews, R. a. (2011). How Work-Family Research Can Finally Have an Impact in Organizations. *Industrial and Organizational Psychology*, *4*(3), 352–369. doi:10.1111/j.1754-9434.2011.01353.x

Kossek, E. E., & Lautsch, B. a. (2012). Work-family boundary management styles in organizations: A cross-level model. *Organizational Psychology Review*, *2*(2), 152–171. doi:10.1177/2041386611436264

Kossek, E. E., Lautsch, B. a., & Eaton, S. C. (2006). Telecommuting, control, and boundary management: Correlates of policy use and practice, job control, and work–family effectiveness. *Journal of Vocational Behavior*, *68*(2), 347–367.

doi:10.1016/j.jvb.2005.07.002

Kossek, E. E., & Michel, J. S. (2010). Flexible work schedules. In S. Zedeck (Ed.), *APA Handbook of industrial and organizational psychology* (Vol. 1, pp. 535 – 572). Washington, DC: American Psychological Association.

Kossek, E. E., Ruderman, M. N., Braddy, P. W., & Hannum, K. M. (2012). Work–nonwork boundary management profiles: A person-centered approach. *Journal of Vocational Behavior*, *81*(1), 112–128. doi:10.1016/j.jvb.2012.04.003

Kossek, E. E., Valcour, M., & Lirio, P. (2014). The Sustainable Workforce: Organizational Strategies for Promoting Work – Life Balance and Wellbeing. In P. Y. Chen & G. L. Cooper (Eds.), *Work and Well-Being: Wellbeing: A Complete Reference Guide* (Vol. III, pp. 295–319). John Wiley & Sons, Inc. doi:10.1002/9781118539415.wbwell14

Kreiner, G. E., Hollensbe, E. C., & Sheep, M. L. (2009). Balancing Borders and Bridges: Negotiating the Work-Home Interface via Boundary Work Tactics. *Academy of Management Journal*, *52*(4), 704–730. doi:10.5465/AMJ.2009.43669916

Lapierre, L. M., & Allen, T. D. (2006). Work-supportive family, family-supportive supervision, use of organizational benefits, and problem-focused coping: implications for work-family conflict and employee well-being. *Journal of Occupational Health Psychology*, *11*(2), 169–81. doi:10.1037/1076-8998.11.2.169

Lazarus, R. S., & Folkman, S. (1984). *Stress, appraisal, and coping*. New York: Springer.

Lewis, S., & Cooper, C. L. (1999). The work-family research agenda in changing contexts. *Journal of Occupational Health Psychology*, *4*(4), 382–393. doi:10.1037/1076-8998.4.4.382

Marks, S. R. (1977). Multiple Roles and Role Strain: Some Notes on Human Energy, Time and Commitment. *American Sociological Review*, *42*(6), 921. doi:10.2307/2094577

Martinengo, G., Jacob, J. I., & Hill, E. J. (2010). Gender and the Work-Family Interface: Exploring Differences Across the Family Life Course. *Journal of Family Issues*, *31*(10), 1363–1390. doi:10.1177/0192513X10361709

Mauno, S., & Rantanen, M. (2012). Contextual and Dispositional Coping Resources as Predictors of Work–family Conflict and Enrichment: Which of These Resources or their Combinations are the Most Beneficial? *Journal of Family and Economic Issues*. doi:10.1007/s10834-012-9306-3

McNall, L. a., Nicklin, J. M., & Masuda, A. D. (2010). A meta-analytic review of the consequences associated with work-family enrichment. *Journal of Business and Psychology*, *25*(3), 381–396. doi:10.1007/s10869-009-9141-1

Meijman, T. F., & Mulder, G. (1998). Psychological aspects of workload. In P. J. D. Drenth & H. Thierry (Eds.), *Handbook of work and organizational psychology, vol. 2: Work psychology* (pp. 5–33). Hove, UK: Psychology Press.

Mesmer-Magnus, J. R., & Viswesvaran, C. (2005). Convergence between measures of work-to-family and family-to-work conflict: A meta-analytic examination. *Journal of Vocational Behavior*, *67*(2), 215–232. doi:10.1016/j.jvb.2004.05.004

Michel, J. S., Clark, M. a., & Jaramillo, D. (2011). The role of the Five Factor Model of personality in the perceptions of negative and positive forms of work–nonwork spillover: A meta-analytic review. *Journal of Vocational Behavior*, *79*(1), 191–203. doi:10.1016/j.jvb.2010.12.010

Michel, J. S., Kotrba, L. M., Mitchelson, J. K., Clark, M. A., & Baltes, B. B. (2011). Antecedents of work-family conflict: A meta-analytic review. *Journal of Organizational Behavior*, *32*(5), 689–725. doi:10.1002/job.695

Michel, J. S., Mitchelson, J. K., Kotrba, L. M., LeBreton, J. M., & Baltes, B. B. (2009). A comparative test of work-family conflict models and critical examination of work-family linkages. *Journal of Vocational Behavior*, *74*(2), 199–218. doi:10.1016/j.jvb.2008.12.005

Milkie, M., & Peltola, P. (1999). Playing All the Roles: Gender and the Work-Family Balancing Act. *Journal of Marriage and the Family*, *61*(2), 476 – 490. Retrieved from http://www.jstor.org/stable/10.2307/353763

Moen, P. (1992). The Concept of Family Adaptive Strategies. *Annual Review of Sociology*, *18*(1), 233–251. doi:10.1146/annurev.soc.18.1.233

Moen, P. (2011). From "work–family" to the "gendered life course" and "fit": five challenges to the field. *Community, Work & Family*, *14*(1), 81–96. doi:10.1080/13668803.2010.532661

Moen, P., & Chermack, K. (2005). Gender disparities in health: strategic selection, careers, and cycles of control. *The Journals of Gerontology. Series B, Psychological Sciences and Social Sciences*, *60 Spec No*(Ii), 99–108. Retrieved from http://www.ncbi.nlm.nih.gov/pubmed/16251599

Moen, P., & Roehling, P. (2005). *The Career Mystique: Cracks in the American Dream*. Lanham: Rowman and Littlefield.

Moen, P., & Sweet, S. (2004). From "work–family" to "flexible careers." *Community, Work & Family*, *7*(2), 209–226. doi:10.1080/1366880042000245489

Moen, P., & Yu, Y. (2000). Effective Work/Life Strategies: Working Couples, Work Conditions, Gender, and Life Quality. *Soc. Probs.*, *47*(3), 291 – 326. Retrieved from http://heinonlinebackup.com/hol-cgi-bin/get_pdf.cgi?handle=hein.journals/socprob47&section=23

Ng, E. S. W., Schweitzer, L., & Lyons, S. T. (2010). New Generation, Great Expectations: A Field Study of the Millennial Generation. *Journal of Business and Psychology*, *25*(2), 281–292. doi:10.1007/s10869-010-9159-4

Petrou, P., Demerouti, E., Peeters, M. C. W., Schaufeli, W. B., & Hetland, J. (2012). Crafting

a job on a daily basis: Contextual correlates and the link to work engagement. *Journal of Organizational Behavior*, *33*(8), 1120–1141. doi:10.1002/job.1783

Pitt-catsouphes, M., Kossek, E. E., & Sweet, S. (2006). Charting New Territory: Advancing Methods , and Approaches in the Study of Work and Family. In *The Work and Family Handbook. Multi- Disciplinary Perspectives and Approaches*.

Pleck, J. H. (1977). The Work-Family Role System. *Social Problems*, *24*(4), 417–427. doi:10.1525/sp.1977.24.4.03a00040

Podsakoff, P. M., MacKenzie, S. B., Lee, J.-Y., & Podsakoff, N. P. (2003). Common method biases in behavioral research: a critical review of the literature and recommended remedies. *The Journal of Applied Psychology*, *88*(5), 879–903. doi:10.1037/0021-9010.88.5.879

Powell, G. N., & Greenhaus, J. H. (2010). Sex, Gender, and Decisions at the Family → Work Interface. *Journal of Management*, *36*(4), 1011–1039. doi:10.1177/0149206309350774

Powell, G. N., & Greenhaus, J. H. (2012). When family considerations influence work decisions: Decision-making processes. *Journal of Vocational Behavior*, *81*(3), 322–329. doi:10.1016/j.jvb.2012.07.006

Quick, J. C. (1999). Occupational health psychology: The convergence of health and clinical psychology with public health and preventive medicine in an organizational context. *Professional Psychology: Research and Practice*, *30*(2), 123–128.

Rantanen, J., Kinnunen, U., Mauno, S., & Tillemann, K. (2011). Introducing Theoretical Approaches toWork-Life Balance and Testing a New Typology Among Professionals. In S. Kaiser, M. J. Ringlstetter, D. R. Eikhof, & M. P. E. Cunha (Eds.), *Creating balance?: International perspectives on the work-life integration of professionals* (pp. 27 – 46). Berlin Heidelberg: Springer. doi:10.1007/978-3-642-16199-5

Rotondo, D. M., & Kincaid, J. F. (2008). Conflict, facilitation, and individual coping styles across the work and family domains. *Journal of Managerial Psychology*, *23*(5), 484–506. doi:10.1108/02683940810884504

Ruderman, M. N., Ohlott, P. J., Panzer, K., & King, S. N. (2002). Benefits of multiple roles for managerial women. *Academy of Management Journal*, *45*(2), 369–386. doi:10.2307/3069352

Schnittger, M. H., & Bird, G. W. (1990). Coping among Dual-Career Men and Women across the Family Life Cycle. *Family Relations*, *39*(2), 199. doi:10.2307/585724

Schoneck, N. M. (2015). Europeans' work and life - out of balance? An empirical test of assumptions from the "acceleration debate." *Time & Society*. doi:10.1177/0961463X15577286

Scott, J., Alwin, D. F., & Braun, M. (1996). Generational Changes in Gender-Role Attitudes: Britain in a Cross-National Perspective. *Sociology*, *30*(3), 471–492. doi:10.1177/0038038596030003004

Shelton, B., & John, D. (1996). The division of household labor. *Annual Review of Sociology*, *22*, 299 – 322. Retrieved from http://www.jstor.org/stable/10.2307/2083433

Shockley, K. M., & Singla, N. (2011). Reconsidering Work-Family Interactions and Satisfaction: A Meta-Analysis. *Journal of Management*, *37*(3), 861–886. doi:10.1177/0149206310394864

Slaughter, A. (2012). Why Women Still Can't Have It All. *The Atlantic*, pp. 1–22.

Somech, A., & Drach-Zahavy, A. (2012). Coping with work-family conflict: The reciprocal and additive contributions of personal coping and organizational family-friendly support. *Work & Stress*, *26*(1), 68–90. doi:10.1080/02678373.2012.660361

Sonnentag, S., & Fritz, C. (2014). Recovery from job stress: The stressor-detachment model as an integrative framework. *Journal of Organizational Behavior*, (January 2013). doi:10.1002/job1924

Standen, P., Daniels, K., & Lamond, D. (1999). The home as a workplace: work-family interaction and psychological well-being in telework. *Journal of Occupational Health Psychology*, *4*(4), 368–381. doi:10.1037/1076-8998.4.4.368

Swiss Federal Statistical Office. (2014). *Schweizerische Arbeitskräfte Erhebung 2013 (SAKE)*. Neuchâtel. Retrieved from http://www.bfs.admin.ch/bfs/portal/de/index/infothek/erhebungen__quellen/blank/blank/enquete_suisse_sur/00.html.

ten Brummelhuis, L. L., & Bakker, A. B. (2012). A resource perspective on the work–home interface: The work–home resources model. *American Psychologist*, *67*(7), 545–556. doi:10.1037/a0027974

Tims, M., & Bakker, A. B. (2010). Job crafting: Towards a new model of individual job redesign. *SA Journal of Industrial Psychology*, *36*(2), 1 – 9. doi:10.4102/sajip.v36i2.841

Tims, M., Bakker, A. B., & Derks, D. (2013). The impact of job crafting on job demands, job resources, and well-being. *Journal of Occupational Health Psychology*, *18*(2), 230–40. doi:10.1037/a0032141

Tomlinson, J. (2007). Employment regulation, welfare and gender regimes: a comparative analysis of women's working-time patterns and work–life balance in the UK and the US. *The International Journal of Human Resource Management*, *18*(3), 401–415. doi:10.1080/09585190601167466

Tone Innstrand, S., Melbye Langballe, E., Arild Espnes, G., Falkum, E., & Gjerl∅w Aasland, O. (2008). Positive and negative work–family interaction and burnout: A longitudinal study of reciprocal relations. *Work & Stress*, *22*(1), 1–15. doi:10.1080/02678370801975842

Twenge, J. M. (2010). A Review of the Empirical Evidence on Generational Differences in Work Attitudes. *Journal of Business and Psychology*, *25*(2), 201–210. doi:10.1007/s10869-010-9165-6

Volkswagen Agrees to Curb Company E-Mail in Off Hours. (2011). *New York Times*. Retrieved from http://www.nytimes.com/2011/12/24/business/volkswagen-curbs-company-e-mail-in-off-hours.html?_r=0

Voydanoff, P. (2002). Linkages Between the Work-family Interface and Work, Family, and Individual Outcomes: An Integrative Model. *Journal of Family Issues*, *23*(1), 138–164. doi:10.1177/0192513X02023001007

Voydanoff, P. (2004). The Effects of Work Demands and Resources on Work-to-Family Conflict and Facilitation. *Journal of Marriage and Family*, *66*(2), 398–412. doi:10.1111/j.1741-3737.2004.00028.x

Westman, M., & Piotrkowski, C. S. (1999). Introduction to the special issue: work-family research in occupational health psychology. *Journal of Occupational Health Psychology*, *4*(4), 301–306.

Wierda-Boer, H., Gerris, J., Vermulst, A., Malinen, K., & Anderson, K. (2009). Combination strategies and work–family interference among dual-earner couples in Finland, Germany, and the Netherlands. *Community, Work & Family*, *12*(2), 233–249. doi:10.1080/13668800902778991

Young, L. M., Baltes, B. B., & Pratt, A. K. (2007). Using selection, optimization, and compensation to reduce job/family stressors: effective when it matters. *Journal of Business and Psychology*, *21*(4), 511–539. doi:10.1007/s10869-007-9039-8

Appendix

Manuscript paper 1: The Experience of Work-Life Balance across Family-Life Stages in Switzerland: A Cross-sectional Questionnaire-based Study

Manuscript paper 2: The long-term Impact of Job Crafting on Job Demands, Job Resources, and Well-Being: A longitudinal mediation Study

Manuscript paper 3: Work-Life Boundaries and Well-Being: Does Work-to-Life Integration Impair Well-Being through Lack of Recovery

Manuscript Paper 1

The Experience of Work-Life Balance across Family-Life Stages in Switzerland: A Cross-sectional Questionnaire-based Study

Ariane G. Wepfer, Rebecca Brauchli, Gregor J. Jenny, Oliver Hämmig, & Georg F. Bauer

Institute of Epidemiology, Biostatistics and Prevention

University of Zurich

Abstract

Background: The division of paid and unpaid labor in families continues to be highly gendered with men doing more paid work and women doing more unpaid care work. This is especially true for life stages with young children. Our study investigates the subjective experience of demands in the work and the private domain and the experience of work-life balance across family-life stages as a consequence of this gendered division of labor.

Methods: We used data from a survey study on work-life issues and health in four large companies in Switzerland (N = 3,664).

Results: In line with our hypotheses, subjective work and private demands were predicted by an interaction of family-life stages and gender. Specifically, during the primary child-rearing family-life stages, women experience more private demands than men while men experience more work demands, regardless of level of employment. Furthermore, women who work part time experience more work-life balance than women who work full time and more than men who work part or full time during the primary child-rearing family-life stages.

Conclusions: Results are discussed in terms of a gendered work-life experience across the life course and the need for part-time work for both genders. Finally, conclusions are drawn concerning our results' implications for public health considerations.

Key words: gender, family-life stages, part-time work, gendered division of labor, work-life balance

Background

The link between work-life balance and health has been confirmed by much research, using diverse research approaches in many different samples and different national contexts [1, 2, 3, 4]. Thus, it can be argued that the experience of balance between work and non-work life as an indicator of well-being and health is of public health interest [2] – not least because it is highly gendered (see below). Work time, gender and family-life stage have long been recognized and discussed as important determinants of the work-life experience [3, 4] but few studies have looked at their interactive effects [3, 5]. Research has found family-life stage to be more relevant than biological age when predicting people's experience at the work-life interface [6]. The current paper aims to investigate the subjective experience of work-life balance as a result of the gendered distribution of paid and unpaid work across the life course in Switzerland. Due to comparably high female labor force participation and a high percentage of part-time workers, Swiss data is suitable to investigate the dynamics of gender and work hours in shaping the work-life experience across family-life stages.

Today's work-life experience

The workforce has changed considerably in western societies in the past 40 years [7]. Social changes have given rise to a much broader participation of women in the labor market [8]. In Switzerland, the employment rate of women aged 15 to 64 has risen from 66.4% in 1991 to 74.1% in 2013 [9]. The employment rate of men aged 15 to 65 has dropped from 90% in 1991 to 83.9% in 2013 [9]. The employment rate of mothers with children under 15 was 57.5% in 1991 and 74.3% in 2013. At the same time, the employment rate for fathers with children under 15 was 98.2% in 1991 and 94.7% in 2013.

While the workforce has changed, the expectations of the workplace have not [10]. Full-time work is still considered the norm [11] and often opportunities and perks hinge on full-time availability. The "ideal worker" norm comprises full-time availability, mobility, high qualifications, a strong work orientation and the readiness to put work first [12]. This norm stems from a time when most workers [13, 14] were men and could rely on a full-time homemaker (usually a wife) to manage the household and do the unpaid care work [10]. Today, most families do not have the backup of a full time homemaker. Statistics for Switzerland shows that in 2013 only 24.1% of women with a partner and children under 15 were not part of the workforce. Among fathers with a partner and children under 15 this rate was 2.8%, including retirees [9]. Thus the "ideal worker" norm is outdated and not in line with today's workforce and its needs, yet it continues to shape the expectations of employers and thereby our working conditions [10].

Apart from large time commitments to work, there is evidence for an intensification of work through heightened work pressure and new technologies [13, 14]. Confronted with high demands and expectations in the work and the private domain, many families with young children experience extensive time pressures and a sense of imbalance or misfit [10, 11]. In a representative study on the Swiss working population, Hämmig, Gutzwiller, and Bauer [1] found that 12.5% of the study population indicated experiencing high or very high work-life conflict. Living with dependent children was a significant predictor of work-life conflict for both sexes.

Across Europe and the USA, different countries have introduced a range of policies to foster the reconcilability of work and non-work life, especially for families. In the US, it is mainly up to employers to establish working conditions that support the reconcilability of work and non-work life for working families [15]. In Europe, and especially in the northern European countries, policies on a national level are more commonly found [16–18]. Still, national policies and welfare state regimes vary greatly across Europe and research shows

marked differences in female labor-force participation and part-time work [16, 18–21]. The division of paid and unpaid labor between men and women with dependent children is shaped by a combination of national policies, organizational practices and societal and personal beliefs and expectations [21, 22]. In Switzerland, the combination of low state support for women's labor force participation, together with expensive childcare and relatively high salaries leads to the neo-traditional model (men work full time, women part-time) being most commonly found [23]. In 2013, in 51.8% of couple households with at least one child under 15, the male partner was full-time employed while the female partner was working part time [24]. Compared to other European countries, these part-time jobs often comprise very few hours. Figures from 2013 show that of the 61.8% of mothers with children under 15 who work part time, more than half work less than 50% [24]. As a result, the division of housework and childcare in families with dependent children follows a largely traditional pattern. While the overall amount of hours spent in paid and unpaid work differs by children's age but is very comparable for men and women, figures from the SAKE 2013 show that women still do the bulk of the house and care work. Even though fathers nowadays are more involved in house work and child care, the great majority of families say that mothers are chiefly responsible for managing the household [9].

As a consequence, the work biographies of men and women differ markedly. For men, the norm still is continuous full-time employment from the entry into the workforce until retirement. The norm for women is part-time work or even a temporary exit from the workforce when children are born. In fact, only few women go back to full-time employment, even after their children are grown [25]. In an analysis of the situation of working families in the US, Moen and Sweet [11] discovered a similar situation and discussed this phenomenon under the term of the "gendered life-course". Due to the reasons given above, the differences between men's and women's roles and experiences in the work and the private domain are very pronounced in Switzerland when compared to the northern European countries. In this

study, we seek to investigate the subjective, experiential level of these demographic differences across the life course. We focus on the experience of subjective work and private demands and work-life balance.

Family-life stages

The concept of *family-life stages* [26] has been used previously to explore how the experience at the work-life interface differs across the life course [6, 27] for men and women [3]. Family-life stages describe the family-life cycle divided into a sequence of consecutive stages, characterized by certain roles and demands on time and energy in the private domain as well as in the work domain [26, 27]. For a literature review of family-life stage-specific demands see Erickson et al. [27]. In our current study, we distinguish 5 family-life stages: (1) young adults without children, (2) parents of preschoolers, (3) parents of primary school-age children, (4) parents of children 12+ and (5) adults with grown children. Our operationalization follows Hill et al. [5] in using the age of the youngest child of a family to define family-life stages. As stated above, family-life stages are much more revealing than biological age when investigating work-life balance and its development over the life course. This fact is highly relevant when public health interventions are planned and implemented aiming at the elimination of inequalities concerning work-life balance and, in consequence, concerning well-being and health.

Work and private demands across family-life stages

Research confirms that *non-work life demands* on time and energy are highest in family-life stages with young children at home and lowest in family-life stages without children and after children have left home [28, 29].

Work demands are theorized to partly parallel private demands [28, 30] and there is empirical support for this parallel trend across the life course [5, 27]. High private demands

during the primary child-rearing years coincide with the heightened work demands of the primary career-building years [3, 28, 31]. Expressions such as "time squeeze" and "rush hour of life" have been used to describe this phenomenon [31, 32].

Work-Life Balance

The concept of *work-life balance* captures the reconcilability between the work and the private domains and can be described as "an overall interrole assessment of compatibility between work and family roles" (p. 703) [33]. Unlike work-life conflict and enrichment, it is not about causal influence of one domain on the other [33]. There is far less research on work-life balance than on conflict and enrichment. It has sometimes been equated with low work-life conflict and high enrichment [34]. Lately though, researchers have begun to view work-life balance as a construct in its own right [33, 35]. Greenhaus and Allen [36] discuss work-life balance as an outcome of satisfaction with and effectiveness in different life roles in accordance with one's life values. Across the life course, the relative importance of work and family roles and therefore life values are likely to change. Therefore, work-life balance can be seen as an indicator of satisfaction with the extent to which people can live in accordance with their current life values. Furthermore, research has established its discriminant validity together with work-life conflict and enrichment [37].

Study Aims & Hypotheses

Given the actual gendered division of paid und unpaid work in families in Switzerland, our current study seeks to investigate men's and women's subjective experience of demands in the work and private domain across the life course, as well as the experience of work-life balance. Special attention is given to family-life stages with young children. We do this in a big, diverse sample of employees from four large Swiss companies.

Previous studies on the reconcilability of work and non-work life in Switzerland have investigated different demographic predictors separately [1, 38]. In this study we look at the interactive effect of family-life stage, gender and level of employment, because these factors are not distributed at random but highly correlated. As discussed above, the employment pattern of men and women across family-life stages reflects a complex interplay of normative believes and expectations at the personal and the societal level, work practices and benefits at the organizational level, and policies and welfare state regimes at the political level. To understand the subjective experience at the work-life interface associated with this employment pattern across the life course, it is instructive to look at interactive effects of demographic variables.

Instead of focusing on conflicts or imbalance between work and non-work life, as previous Swiss studies have done [1, 38–40], we look at work-life balance as a more global assessment of reconcilability of work and non-work life.

In a first step, we investigate how family-life stage, gender and level of employment influence the experience of work and private demands. We expect *work demands* to be highest during family-life stages 2 and 3, because the career-building years tend to coincide with the primary child rearing family-life stages. Due to gender role expectations and related actual task distribution, we assume that, compared to women, men experience more work demands during the primary child rearing family-life stages, regardless of their level of employment.

Hypothesis 1: work demands

a. Work demands are highest during family-life stages 2 and 3.

b. Men's work demands are higher than women's in family-life stages 2 and 3.

Moreover, we expect that *private demands* will be highest during the primary child-rearing years (family-life stages 2 and 3). Due to gender role expectations and related actual task

distribution, we further assume that, irrespective of level of employment, women's private demands will be higher than men's during the primary child rearing family-life stages.

Hypothesis 2: private demands

a. Private demands are highest during family-life stages 2 and 3.
b. Women's private demands are higher than men's in family-life stages 2 and 3.

In a second step, we investigate how family-life stage, gender and level of employment influence the experience of work-life balance. We expect *work-life balance* to be lowest during the primary child rearing family-life stages (family-life stages 2 and 3), because work and private demands are highest during those stages, which makes it difficult to achieve a sense of balance and reconcilability. Furthermore, we hypothesize that in family-life stages 2 and 3 women's part-time work affords them a better work-life balance as compared to men, because on average women work fewer hours.

Hypothesis 3: Work-life balance

a. Work-life balance is lowest during family-life stages 2 and 3.
b. In family-life stages 2 and 3, women who work part time experience a better work-life balance than women who work full time or men who work part- or full time.

Method

Data

The data was collected in a survey study on work-life issues and health at four large companies in Switzerland in various sectors: healthcare, banking, insurance, and logistics. We used information on age, number of children living at home and age of youngest child living at home to classify participants into five family-life stages. The original sample comprised 6,091 participants. A subsample of $N = 3{,}664$ could be classified into our five family-life stages. The other participants had missing values in relevant demographic variables or didn't

fit our specifications for family-life stages. There were less than 5% missing values in all dependent study variables. Following Schafer & Graham's [41] recommendations, missing values were replaced using maximum-likelihood estimation.

Ethical aspects

The anonymity and confidentiality of participation in the study were ensured. Furthermore, participants voluntarily agreed to take part in the study and gave their consent prior to completing the questionnaire. All participants were allowed to complete the questionnaire during working time. Since the data collection was completely anonymous, according to the ethics commission of the Canton of Zurich, no approval of an ethics committee was necessary.

Variables and Measures

Work demands: A single item was used to obtain a global rating of subjective work demands. The item we used read: 'How high is the intensity of your overall work demands?' Participants rated the intensity of their overall work demands on a Likert-scale ranging from 1 = *very low* to 5 = *very high*.

Private demands: A single item, reading, 'How high is the intensity of your overall private demands?' was used to obtain a global measure of subjective private demands. Participants scored their overall private demands on a Likert-scale ranging from 1 = *very low* to 5 = *very high*.

Work-life balance: Two self-developed items were used to measure work-life balance. The items read 'I feel the relation between my work and my non-work life is optimal' and 'Next to my work, I have enough resources (such as time and energy) left for my non-work life'. These items were scored on a 5-point Likert-scale ranging from 1 = *completely disagree* to 5 =

completely agree. The two items were averaged to obtain an overall score. The internal consistency was good ($\alpha = .84$).

Family-life stage (FLS): Following Hill et al. [5], family-life stages were operationalized using participants' age, number of children living at home and age of the youngest child living at home. Participants were categorized into five family-life stages.

- *Family-Life Stage 1* – participants 25 to 34 years old, no children
- *Family-Life Stage 2* – participants 20 years or older, youngest child preschool age
- *Family-Life Stage 3* – participants 25 years or older, youngest child in primary school
- *Family-Life Stage 4* – participants 30 years or older, youngest child older than 12
- *Family-Life Stage 5* – participants 55 years or older, no more children living at home.

Level of employment was measured in five categories: a) 100%, b) 80% - 99%, c) 50% - 79%, d) 30% 49% and e) less than 30%. In Switzerland, working full time (100%) means 40 to 42 hours per week. Because only few men worked less than 80%, the categories were collapsed into a new bivariate variable with the categories 'full time' (100%) and 'part time' (less than 100%) for all analyses of variance.

Relationship status was used as a control variable and operationalized as an ordinal measure with three categories, 1 = "no partner", 2 = "partner, no shared household", 3 = "partner, shared household".

Analyses

A series of ANOVAs and hierarchical regression analyses were performed in order to answer the study's research questions. For the ANOVAs, homogeneity of variances was assumed when Levene's test was non-significant or when the variance ratio between the biggest and the smallest group variance was smaller than 2 [42]. This was true for all performed analyses of variance and will not be reported separately in the results section. In addition we conducted separate regression analyses for men and women to further explore the influence of level of

employment on our dependent variables. This was done because gender and level of employment is highly correlated and the dichotomization into part- and full-time work for the analyses of variance does not accommodate for that. In these analyses, we controlled for relationship status.

Results

Descriptive Analysis

The sample consisted of 2,204 men and 1,460 women (total *N* = 3,664). The number of men and women per FLS can be seen in *Table 2*. The median age category was '36 to 40' years. The age category '31 to 35' held the highest absolute number of participants. 76.2% of participants were living in a shared household with their partner. 8.2% of participants had a partner but didn't live in the same household with him/her, 14.1% said, they had no partner and 1.5% didn't reply. 43.6% of participants had no children living in the same household with them, and 56.4% had one or more children living in the same household. 0.1% did not reply but fit the criteria of family-life stage 1 otherwise.

Means, standard deviations, correlations and internal consistencies, where appropriate, of the central study variables are given in *Table 1*.

Table 1. Correlations, means, standard deviations and internal consistencies of study variables

Variables	2	3	4	5	6	*M*	*SD*	*α*
1 work demands	.20**	-.42**	-.14**	.19**	.07**	3.52	.82	
2 private demands		-.11**	-.01	-.12**	.05*	2.98	.91	
3 work-life balance			.10**	-.25**	.00	3.24	.93	.84
4 gender				-.50**	-.17**			
5 level of employment					.00			
6 relationship status								

*p < .01, ** p < 0.001, n = 3606 – 3664, gender: 0 = male, 1 = female

Table 2 gives the absolute and relative numbers of men's and women's level of employment. Most men worked full time across all FLS, with the highest rates in FLS 2, 3 and 4. While

most women worked full time in FLS 1 (before they have children), most worked part time in all other family-life stages.

Table 2. Level of employment by gender and family-life stage

		FLS 1		FLS 2		FLS 3		FLS 4		FLS 5	
Level of employment		*n*	*%*	*n*	*%*	*n*	*%*	*n*	*%*	*n*	*%*
men	100%	559	86.3	406	90.6	547	93.3	345	95.0	139	87.4
	80+%	56	8.6	36	8.0	31	5.3	16	4.4	11	6.9
	50+%	19	2.9	5	1.1	3	0.5	1	0.3	5	3.1
	30+%	10	1.5	1	0.2	2	0.3	0	0.0	2	1.3
	< 30%	4	0.6	0	0.0	3	0.5	1	0.3	2	1.3
total		648	100	448	100	586	100	363	100	159	100
women	100%	478	72.5	33	14.3	41	15.4	34	18.9	37	30.3
	80+%	139	21.1	29	12.6	40	15.0	47	26.1	31	25.4
	50+%	26	3.9	97	42.2	96	36.0	71	39.4	45	36.9
	30+%	12	1.8	50	21.7	63	23.6	27	15.0	8	6.6
	< 30%	4	0.6	21	9.1	27	10.1	1	0.6	1	0.8
total		659	100	230	100	268	100	181	100	122	100
n per life-stage		1307		678		854		544		281	

Note: FLS = Family-life stage

Tests of Hypotheses

Hypothesis 1: work demands

We first conducted a 5 x 2 x 2 ANOVA (FLS x gender x level of employment) with work demands as the dependent variable. The analysis yielded significant main effects for family-life stage ($F_{(4, 3642)} = 3.70$, $p = .001$, $\eta_p^2 = .004$) and level of employment ($F_{(1, 3642)} = 18.37$, $p < .001$, $\eta_p^2 = .005$). Further, the two-way interaction family-life stage x gender ($F_{(4, 3642)} = 3.51$, $p = .007$, $\eta_p^2 = .004$) was significant and the three-way interaction was significant, too ($F_{(4, 3642)} = 2.73$, $p = .028$, $\eta_p^2 = .003$).

Hypothesis 1a predicts that work demands will be highest in FLSs 2 and 3. In order to test this hypothesis, the main effect of FLS was explored. Bonferroni corrected post-hoc tests and Hochberg's GT 2 tests showed that FLSs 2, 3 and 4 reported the highest work demands ($M = 3.52$, $SD = .81$; $M = 3.58$, $SD = .82$ and $M = 3.60$, $SD = .82$ respectively). These means all significantly differed from the work demands reported in FLS 5 ($M = 3.35$, $SD = .91$). FLS 1 ($M = 3.49$, $SD = .79$) differed significantly from FLS 3. These results mostly support

hypothesis 1a, which states that work demands are highest in FLSs 2 and 3. The effect of FLS and the individual mean differences are rather small though.

We then explored the FLS x gender two-way interaction effect, which was in line with hypothesis 1b. A one-factorial ANOVA with gender as the independent variable and work demands as the dependent variable was conducted for every FLS. To account for alpha accumulation, only p-values smaller than .01 were considered significant. Significant main effects for gender were found in FLS 2 ($F_{(1, 676)} = 37.74$, $p < .001$, $\eta_p^2 = .053$), FLS 3 ($F_{(1, 852)} = 60.47$, $p < .001$, $\eta_p^2 = .066$) and FLS 4 ($F_{(1, 542)} = 11.99$, $p = .001$, $\eta_p^2 = .022$). Men reported significantly higher work demands than women in FLS 2 (men: $M = 3.65$, $SD = .76$; women: $M = 3.26$, $SD = .84$), FLS 3 (men: $M = 3.72$, $SD = .75$; women: $M = 3.27$, $SD = .88$) and FLS 4 (men: $M = 3.68$, $SD = .75$; women: $M = 3.43$, $SD = .91$). The significant three-way interaction was not in line with our hypotheses. Conducting a gender x level of employment ANOVA for every FLS yielded a significant two-way interaction for FLS 1 only ($F_{(1, 1303)} = 9.07$, $p = .003$, $\eta_p^2 = .007$). Because hypothesis 2b predicts gender differences for FLSs 2 and 3 and does not make specific predictions for FLS 1, we did not further investigate this three-way interaction. To sum up, we found gender differences in FLS 2 and 3, which is in line with hypothesis 2b. Furthermore, there was a significant gender effect in FLS 4. Figure 1 illustrates the FLS x gender interaction effects on work demands.

To account for the fact that our part-time vs. full-time dichotomization means something very different for men and for women in the primary child-rearing family-life stages (women in part-time work work much fewer hours on average than men in part-time work), we further conducted hierarchical regression analyses for work demands with level of employment as a continuous predictor variable and relationship status as a control variable. We calculated separate regression equations for men and for women in FLS 2, 3 and 4. We found small effects ($\Delta R^2 = .02$ to $.06$) of level of employment on subjective work demands. Level of

employment significantly predicted men's subjective work demands in FLS 2 and women's in FLS 2 and 3. Because of space limits, please refer to Table 3 for statistical details.

Table 3. Results of regression analyses

			Family-life stage 2				Family-life stage 3				Family-life stage 4			
			b	SEb	β	ΔR^2	b	SEb	β	ΔR^2	b	SEb	β	ΔR^2
Work demands	m	partner	.15	.15	.05	.00	.15	.10	.06	.00	.38	.11	.17*	.03*
		partner	.10	.15	.03	.02*	.15	.10	.06	.00	.38	.11	.17*	.01
		Level employ.	.26	.10	.13*		.08	.07	.04		.23	.13	.09	
	f	partner	-.15	.09	-.11	.01	.00	.07	.00	.00	.02	.09	.02	.00
		partner	-.09	.09	-.07	.03*	.06	.07	.05	.06*	.05	.09	.04	.01
		Level employ.	.14	.05	.19*		.17	.05	.24*		.09	.07	.10	
Private demands	m	partner	-.22	.17	-.06	.00	-.06	.13	-.02	.00	-.16	.13	-.07	.00
		partner	-.19	.17	-.05	.00	-.06	.13	-.02	.00	-.16	.13	-.07	.00
		Level employ.	-.14	.11	-.06		-.09	.09	-.04		.06	.14	.02	
	f	partner	-.04	.04	-.04	.00	-.05	.08	-.04	.00	-.03	.09	-.02	.00
		partner	-.04	.04	-.04	.00	-.06	.09	-.05	.00	.02	.09	.01	.02*
		Level employ.	-.06	.05	-.05		-.01	.05	-.02		.14	.07	.15*	
Work-life balance	m	partner	.17	.19	.04	.00	-.02	.12	-.01	.00	.03	.14	.01	.00
		partner	.24	.19	.06	.02*	-.02	.12	-.01	.01	.03	.14	.01	.02*
		Level employ.	-.32	.12	-.13*		-.15	.09	-.07		-.35	.15	-.12*	
	f	partner	.18	.10	.12	.01	.16	.08	.13	.02	.29	.09	.23*	.05*
		partner	.00	.09	.00	.25*	.05	.07	.04	.19*	.16	.09	.12	.19*
		Level employ.	-.43	.05	-.51*		-.36	.05	-.45*		-.45	.07	-.45*	

Note: m = men, f = women, *p < .05, partner = relationship status, Level employ. = Level of employment

Hypothesis 2: private demands

A 5 x 2 x 2 ANOVA (FLS x gender x level of employment) was performed with private demands as the dependent variable. The analysis yielded a significant main effect for family-life stage ($F_{(4, 3642)} = 45.35$, $p < .001$, $\eta_p^2 = .047$) and a significant two-way interaction for family-life stage x gender ($F_{(4, 3642)} = .82$, $p = .001$, $\eta_p^2 = .005$).

Hypothesis 2a predicts private demands to be highest in FLSs 2 and 3. In order to test this hypothesis, the main effect of FLS was explored. Bonferroni corrected post-hoc tests and Hochberg's GT 2 tests showed that subjects in FLSs 2 and 3 reported the highest private demands ($M = 3.32$, $SD = .84$ and $M = 3.25$, $SD = .91$ respectively). The means of FLSs 2 and 3 differed significantly from the mean reported by subjects in FLS 4 ($M = 2.93$, $SD = .86$). Participants in FLSs 1 and 5 reported significantly lower private demands ($M = 2.72$, SD

= .86 and M = 2.62, SD = .87 respectively). All p-values for significant mean comparisons were $p < .001$. This is in line with hypothesis 1a.

In order to explore the nature of the significant two-way interaction, a one-factorial ANOVA with gender as the independent variable and private demands as the dependent variable was conducted for every family-life stage. To account for alpha accumulation, only p-values smaller than .01 were considered significant. Significant main effects for gender were found in FLS 1 ($F_{(1, 1305)} = 5.94$, $p = .015$, $\eta_p^2 = .005$), FLS 2 ($F_{(1, 676)} = 16.19$, $p < .001$, $\eta_p^2 = .023$) and FLS 3 ($F_{(1, 852)} = 24.02$, $p < .001$, $\eta_p^2 = .027$). In FLS 1, private demands were higher for men (M = 2.78, SD = .83) than for women (M = 2.66, SD = .89). In line with hypothesis 2b, we found gender effects in FLS 2 and 3. Women reported significantly higher private demands than men (FLS 2: men M = 3.23, SD = .85; women M = 3.50, SD = .79; FLS 3: men M = 3.15, SD = .92; women M = 3.47, SD = .84). Figure 1 illustrates this interaction effect of FLS x gender.

Again we conducted hierarchical regression analyses for private demands with level of employment as a continuous predictor variable and relationship status as a control variable. We calculated separate regression equations for men and women in FLSs 2, 3 and 4. We only found tiny effects ($\Delta R^2 = .02$) of level of employment on subjective private demands for women in FLS 4. For statistical details, please refer you to table 3.

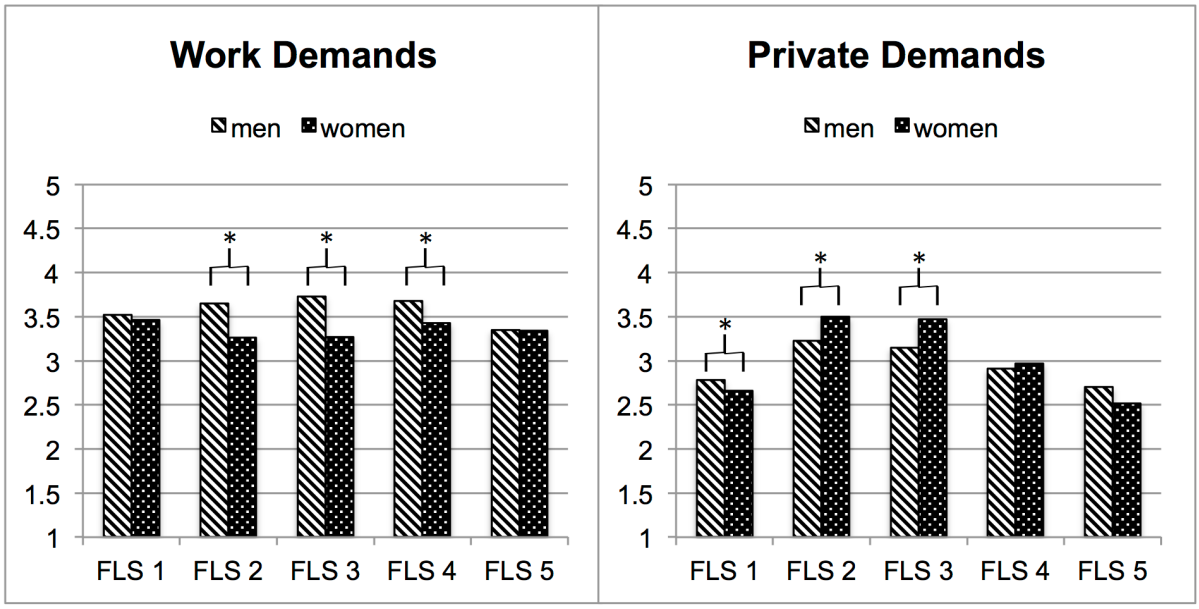

Figure 1. Interaction effects of family-life stage and gender on work and private demands

Hypothesis 3: work-life balance

A 5 x 2 x 2 ANOVA (FLS x gender x level of employment) with work-life balance as the dependent variable was performed. The analysis yielded significant main effects for family-life stage ($F_{(4, 3642)} = 8.06$, $p < .001$, $\eta_p^2 = .009$) and level of employment ($F_{(1, 3642)} = 78.22$, $p < .001$, $\eta_p^2 = .021$) and two significant two-way interactions (gender x level of employment: $F_{(1, 3642)} = 8.20$, $p = .004$, $\eta_p^2 = .002$; family-life stage x level of employment: $F_{(4, 3642)} = 5.12$, $p < .001$, $\eta_p^2 = .006$). Furthermore, as predicted in Hypothesis 4b, the three-way interaction was significant ($F_{(4, 3642)} = 2.90$, $p = .021$, $\eta_p^2 = .003$).

Hypothesis 3a predicts work-life balance to be lowest in FLSs 2 and 3. In order to test this hypothesis, the main effect of FLS was explored. Bonferroni corrected post-hoc tests and Hochberg's GT 2 tests showed that FLS 5 ($M = 3.64$, $SD = .86$) reported significantly higher work-life balance than all other FLSs (FLS 1: $M = 3.19$, $SD = .92$; FLS 2: $M = 3.24$, $SD = .95$; FLS 3: $M = 3.19$, $SD = .92$; FLS 4: $M = 3.27$, $SD = .92$). This result does not support our hypothesis. In line with hypothesis 3b, the main effect of FLS was qualified by a significant three-way interaction. A 2 x 2 ANOVA (gender x level of employment) for every FLS with

work-life balance as the dependent variable yielded significant two way interactions for FLS 2 ($F_{(1, 674)} = 7.56$, $p = .006$, $\eta_p^2 = .011$) and FLS 3 ($F_{(1, 849)} = 6.36$, $p = .012$, $\eta_p^2 = .007$). Simple effects analyses for FLS 2 showed that men ($M = 3.08$, $SD = .92$) and women ($M = 2.71$, $SD = .75$) who work full time did not differ by their reported work-life balance, but men and women who work part time did differ significantly ($F_{(1, 673)} = 19.05$, $p < .001$). Women who work part time reported higher work-life balance than men who work part time (men: $M = 3.37$, $SD = .88$; women: $M = 3.62$, $SD = .93$). Furthermore, men who work part or full time did not differ in their reported work-life balance, while for women the predicted difference between part- and full-time workers was found ($F_{(1, 673)} = 35.95$, $p < .001$).

Simple effects analyses [42] for FLS 3 showed that men ($M = 3.03$, $SD = .87$) and women ($M = 2.87$, $SD = .89$) who work full-time did not differ in work-life balance, while men and women who work part time differed significantly ($F_{(1, 848)} = 32.88$, $p < .001$). Specifically, women who work part time reported higher work-life balance than men who work part time (men: $M = 3.28$, $SD = .80$; women: $M = 3.65$, $SD = .91$). Furthermore, there were significant differences in work-life balance between part- and full-time work for men ($F_{(1, 848)} = 8.87$, $p = .003$) and women ($F_{(1, 848)} = 43.71$, $p < .001$). The latter was predicted in hypothesis 4b. Figure 2 illustrates the gender by level of employment interaction effects on work-life balance in family-life stages 2 and 3.

We conducted hierarchical regression analyses for work-life balance with level of employment as a continuous predictor variable and relationship status as a control variable and calculated separate regression equations for men and women in FLSs 2, 3 and 4. We found that level of employment was a substantial predictor ($\Delta R^2 = .19$ to $.25$) of work-life balance for women in FLSs 2, 3 and 4. For men, we only found very small effects ($\Delta R^2 = .02$) in FLS 2 and 4. For statistical details, please refer to Table 3.

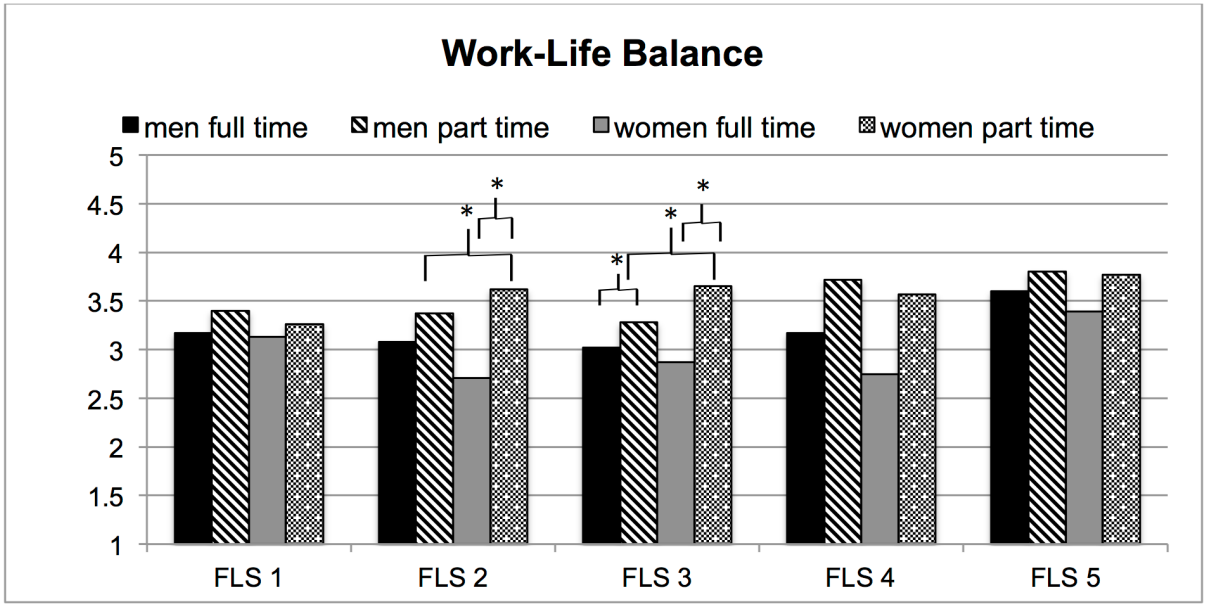

Figure 2. Three-way interaction effect of family-life stage, gender and level of employment on work-life balance

Discussion

Our aim was to investigate men's and women's subjective work and private demands across family-life stages, as well as the experience of work-life balance in a sample of Swiss employees, given the actual gendered division of paid und unpaid work in families in Switzerland. For this purpose we looked at the subjective experience of demands in the work and private domain and the experience of work-life balance as a function of family-life stage, gender and level of employment.

With regard to subjective work demands, we expected the demands to be highest during family-life stages 2 and 3, because the career building years tend to coincide with the primary child rearing family-life stages. We further expected men to experience higher subjective work demands due to their role as primary breadwinners and their higher levels of employment. Our findings support this hypothesis. Participants in family-life stages 2, 3 and even 4 reported the highest work demands. This is in line with a study by Erickson et al. [27] that finds increases in work role demands across the primary child-rearing family-life stages

for a big international sample of professionals. In addition, we found that men experience significantly higher work demands than women in those family-life stages. Additional analyses for men and women showed that the effect of level of employment on subjective work demands was rather small. We found an effect for men in FLS 2 and for women in FLS 2 and 3. Our interpretation of these findings is that work is experienced as rather demanding during the primary child-rearing family-life stages, that men are burdened more than women with work demands and that the extent to which work is experienced as demanding is only loosely tied to level of employment when looking at men and women separately. This could reflect the fact that men often do not have the possibility to work reduced hours and if they do, they might still be expected to get the same amount of work done as if they would work full time. In the case of women, these findings might reflect their second earner status within most couples. They might feel less burdened by paid work because they feel less responsible for the family's financial security or they might encounter different expectations from their employers than men. It might also reflect a strategic selection of women, a strategy to choose less demanding jobs in order to take on more private responsibilities. There is evidence for this kind of strategic selection [43–45].

In the case of private demands our prediction was supported, too. Subjective private demands were highest in family-life stages 2 and 3 and women in those stages reported significantly higher demands than men. The level of employment had no influence on how burdened parents in family-life stages 2 and 3 felt by their private commitments. We interpret this finding in the sense that private demands cannot be regulated according to level of employment. Studies have shown that women not only spend more hours in childcare but also feel more responsible for care tasks while fathers' time spent with children involves more play [46, 47]. Consequently, women in the primary child-rearing family-life stages might feel more burdened with the demands of the private domain than men. Together, our results for

subjective global work and private demands mirror the actual gendered division of hours in paid and unpaid work in Swiss families [9].

We expected work-life balance to be lowest in family-life stages with small children, due to highest total demands in the work and the private domain. This was not confirmed, however. Work-life balance was best in family-life stage 5, when children are grown and have left home. All other family-life stages did not differ in terms of reconcilability of work and non-work life. We can conclude that the results for work-life balance don't mirror the curvilinear relationship between family-life stages and work-life conflict that has been reported by previous studies [27, 29]. However, in line with hypothesis 3b, we found evidence for our assumption that women's part time work affords them a better work-life balance in family-life stages 2 and 3. With regard to men, the evidence was less conclusive. The analysis of variance suggested a small effect of level of employment in family-life stage 4, while the results from the regression analyses found evidence for a positive effect of part-time work on work-life balance in family-life stage 3. Taken together we can conclude, that despite very high overall demands in family-life stages with small children at home, women can maintain a better work-life balance by working low to moderate levels of part time. Having said that, women who work full time and men, for whom full-time work is the norm and part-time work an exception, find it harder to reconcile work and non-work life in family-life stages with small children; they report lower levels of work-life balance.

Strengths and limitations and future research

Even though our sample might not be representative for the entire working population, it covers a wide variety of jobs in divers sectors across hierarchy levels. Further research including different samples is needed in order to generalize our findings. Specifically, blue collar workers are underrepresented in our sample and might show different patterns of work

demands over the life course. Our study needs to be replicated for this population of workers before findings can be generalized.

We used cross-sectional data in this study and therefore the effects of family-life stages might be confounded with cohort effects. Longitudinal studies are necessary to disentangle life-course effects from cohort effects.

Despite these limitations, we believe that our study adds to the existing research on the gendered division of labor in Switzerland by highlighting that men's and women's subjective experience of work-life balance depends on the interplay of life stage and level of employment. Future research should investigate whether there are life stage specific predictors of work-life balance. Furthermore, there might be life stage-, gender- and level of employment-specific consequences of work-life balance, such as consequences for life satisfaction, health and well-being.

Since part-time work is not so common among men with small children at home, we had relatively few fathers in our dataset who worked reduced hours. Future research should focus on fathers with reduced hours and investigate whether their subjective work-life balance benefits as much from part-time work as women's.

Conclusions

Our data illustrates fathers' and mothers' subjective experience of the gendered division of labor. The psychological experience of work and private demands parallels the actual division by hours [9]. It illustrates the inequality of men and women in the work and the private realm – and in its consequence a health inequality – on a more experiential level. According to Swiss statistics [24], in 2012 13.7% of mothers who worked part time said they would like to work more. 37.8% of mothers who worked full time said they would like to reduce their hours. Among fathers who worked full time, 18.4% said they would prefer part-time work and only 1.5% of part-time working fathers wanted to increase their hours. These findings

together with our findings for fathers' and mothers' unequal experience of work-life balance as a result of their gendered division of paid and unpaid work speaks to a "fundamental mismatch" (Moen, 2011; pp. 87) between today's workforce and todays workplace. As work-life balance is an indicator of satisfaction with the extent to which people feel they live in accordance with their current life values, our results make it clear that more state support and workplace flexibility in terms of part-time work for men is sorely needed in order to enable today's parents to create a more equitable experience in the work and the private domain. Because research has repeatedly shown that that work-life balance is related to physical and psychological health indicators, it can be argued that the promotion of work-life balance is of importance in light of public health considerations.

Competing interests

The authors declare that they have no competing interests.

Authors' contributions

AW drafted the paper and analyzed the data. OH was responsible for the data collection whereas RB, GJ and GB were responsible for the funding of the study. RB and GJ as the daily supervisors of the PhD project this study was part of were in charge of the realization and the conception of the study and actively supervised the writing of the paper and the statistical analyses. RB wrote parts of the background section as well as of the discussion and conclusion, read and approved the final manuscript. GJ, OH and GB as senior researchers made significant contributions to the discussion and interpretation of the results, read and approved the final manuscript.

Acknowledgements

The data collection was funded and supported by the four participating companies. The Pfizer Foundation for Geriatrics and Gerontology provided funding for data preparation and analyses.

References

1. Hämmig O, Gutzwiller F, Bauer G: **Work-life conflict and associations with work- and nonwork-related factors and with physical and mental health outcomes: a nationally representative cross-sectional study in Switzerland.** *BMC Public Health* 2009, **9**:435.

2. Lunau T, Bambra C, Eikemo T a, van der Wel K a, Dragano N: **A balancing act? Work-life balance, health and well-being in European welfare states.** *Eur J Public Health* 2014:1–6.

3. Martinengo G, Jacob JI, Hill EJ: **Gender and the Work-Family Interface: Exploring Differences Across the Family Life Course**. *J Fam Issues* 2010, **31**:1363–1390.

4. Duxbury LE, Higgins C a.: **Gender differences in work-family conflict.** *J Appl Psychol* 1991, **76**:60–73.

5. Hill JE, Jacob JI, Shannon LL, Brennan RT, Blanchard VL, Martinengo G: **Exploring the relationship of workplace flexibility, gender, and life stage to family-to-work conflict, and stress and burnout**. *Community Work Fam* 2008, **11**:165–181.

6. Kapinus C a., Johnson MP: **The Utility of Family Life Cycle as a Theoretical and Empirical Tool: Commitment and Family Life-Cycle Stage**. *J Fam Issues* 2003, **24**:155–184.

7. Charles M: **A World of Difference: International Trends in Women's Economic Status**. *Annu Rev Sociol* 2011, **37**:355–371.

8. Galinsky E, Matos K: **The future of work-life fit**. *Organ Dyn* 2011, **40**:267–280.

9. *Schweizerische Arbeitskräfte Erhebung 2013 (SAKE)*. Neuchâtel; 2014.

10. Moen P: **From "work–family" to the "gendered life course" and "fit": five challenges to the field**. *Community Work Fam* 2011, **14**:81–96.

11. Moen P, Sweet S: **From "work–family" to "flexible careers."** *Community Work Fam* 2004, **7**:209–226.

12. Mescher S, Benschop Y, Doorewaard H: **Representations of work--life balance support**. *Hum Relations* 2009, **63**:21–39.

13. Green F, McIntosh S: **The intensification of work in Europe**. *Labour Econ* 2001, **8**:291–308.

14. Kelliher C, Anderson D: **Doing more with less? Flexible working practices and the**

intensification of work. *Hum Relations* 2009, **63**:83–106.

15. Kossek EE, Lewis S, Hammer LB: **Work-life initiatives and organizational change: Overcoming mixed messages to move from the margin to the mainstream.** *Hum Relat* 2010, **63**:3–19.

16. Anxo D, Boulin J-Y: **The Organisation of Time Over the Life Course: European Trends**. *Eur Soc* 2006, **8**:319–341.

17. Crompton R, Lyonette C: **Work-Life "Balance" in Europe**. *Acta Sociol* 2006, **49**:379–393.

18. Bielenski H, Bosch E, Wagner A: *Working Time Preferences in Sixteen European Countries*. Dublin; 2002.

19. Rosenfeld R, Birkelund G: **Women's Part-Time Work: A Cross-National Comparison**. *Eur Sociol Rev* 1995, **11**:111–134.

20. Tijdens KG: **Gender Roles and Labor Use Strategies: Women's Part-Time Work in the European Union**. *Fem Econ* 2002, **8**:71–99.

21. Sandor E: *Part-Time Work in Europe*. Louxembourg; 2011.

22. Gregory A, Milner S: **Editorial: Work-life Balance: A Matter of Choice?** *Gender, Work Organ* 2009, **16**:1–13.

23. Swiss Federal Statistical Office: *Familien in Der Schweiz: Statistischer Bericht 2008*. Neuchâtel; 2008.

24. Swiss Federal Statistical Office: *Das Engagement Der Väter in Haushalt Und Familie: Modul Zur Unbezahlten Arbeit 2010 Der Schweizerischen Arbeitskräfteerhebung*. Neuchâtel; 2013.

25. Swiss Federal Statistical Office: *Demografisches Verhalten Der Familien in Der Schweiz*. Neuchâtel; 2009.

26. Mattessich P, Hill R: **Life cycle and family development. In: Sussman MB, Steinbmetz SK (eds) Handbook of Marriage and the Family. New York: Plenum, .** In *Handbook of Marriage and the Family*. Edited by Sussman MB, Steinmetz SK. New York: Plenum; 1987:437–465.

27. Erickson JJ, Martinengo G, Hill EJ: **Putting work and family experiences in context: Differences by family life stage**. *Hum Relations* 2010, **63**:955–979.

28. Demerouti E, Peeters MCW, van der Heijden BIJM: **Work-family interface from a life and career stage perspective: the role of demands and resources.** *Int J Psychol* 2012, **47**:241–58.

29. Blanchard-Fields F, Chen Y, Hebert CE: **Interrole Conflict as a Function of Life Stage, Gender, and Gender-Related Personality Attributes**. *Sex Roles* 1997, **37**:155 – 174.

30. Grzywacz JG, Almeida DM, McDonald D a.: **Work-Family Spillover and Daily**

Reports of Work and Family Stress in the Adult Labor Force. *Fam Relat* 2002, **51**:28–36.

31. Klammer U: **The "Rush Hour" of Life: Insecurities and Strains in Early Life Phases as a Challenge for a Life Course-Oriented, Sustainable Social Policy**. In *A Young Generation Under Pressure?* Edited by Tremmel J. Berlin, Heidelberg: Springer Berlin Heidelberg; 2010.

32. Clarkberg M, Moen P: **Understanding the Time-Squeeze: Married Couples' Preferred and Actual Work-Hour Strategies**. *Am Behav Sci* 2001, **44**:1115–1136.

33. Allen TD: **The Work – Family Role Interface: A Synthesis of the Research from Industrial and Organizational Psychology**. In *Handbook of Psychology, Second Edition*. Second. Edited by Schmitt NW, Highhouse SI, Weiner IB. Hoboken, NJ, USA: John Wiley & Sons Inc; 2013:698 – 718.

34. Frone MR: **Work–family balance**. In *Handbook of occupational health psychology.* Edited by Quick JC, Tetrick LE. Washington, DC, USA: American Psychological Association; 2003:143–162.

35. Greenhaus J, Allen T: **Work-Family Balance: A Review and Extension of the Literature**. In *Handbook of occupational health psychology*. 2nd ed. Edited by Campbell Quick J, Tetrick LE. Washington, DC, USA: American Psychological Association; 2010:156 – 183.

36. Greenhaus JH, Allen TD: **Work-family balance: A review and extension of the literature**. In *Handbook of Occupational Health Psychology, 2nd Edition*. Edited by Quick JC, Tetrick LE. Washington: American Psychological Association; 2010:165–183.

37. Carlson DS, Grzywacz JG, Zivnuska S: **Is work-family balance more than conflict and enrichment?** *Hum Relat* 2009, **62**:1459.

38. Hämmig O, Bauer G: **Work-life imbalance and mental health among male and female employees in Switzerland.** *Int J Public Health* 2009, **54**:88–95.

39. Brauchli R, Bauer GF, Hämmig O: **Job autonomy buffers the impact of work-life conflict on organizational outcomes**. *Swiss J Psychol* 2014, **73**:77 – 86.

40. Knecht MK, Bauer GF, Gutzwiller F, Hämmig O: **Persistent work-life conflict and health satisfaction - a representative longitudinal study in Switzerland.** *BMC Public Health* 2011, **11**:271.

41. Schafer JL, Graham JW: **Missing data: Our view of the state of the art.** *Psychol Methods* 2002, **7**:147–177.

42. Field A: *Discovering Statistics Using SPSS (2nd Ed.).* Thousand Oaks, CA US: Sage Publications, Inc; 2005.

43. Becker P, Moen P: **Scaling Back: Dual-Earner Couples' Work-Family Strategies**. *J Marriage Fam* 1999, **61**:995 – 1007.

44. Jeffrey Hill E, Martinson V, Ferris M: **New-Concept Part-Time Employment as a**

Work-Family Adaptive Strategy for Women Professionals with Small Children*. *Fam Relat* 2004, **53**:282–292.

45. Moen P, Yu Y: **Effective Work/Life Strategies: Working Couples, Work Conditions, Gender, and Life Quality**. *Soc Probs* 2000, **47**:291 – 326.

46. Bittman M, Wajcman J: **The Rush Hour: The Character of Leisure Time and Gender Equity "**. *Soc forces* 2000, **79**(September 2000):165–189.

47. Noor NM: **Work- and family-related variables, work–family conflict and women's well-being: some observations**. *Community Work Fam* 2003, **6**:297–319.

Manuscript Paper 2

The long-term Impact of Job Crafting on Job Demands, Job Resources, and Well-Being: A longitudinal mediation Study

Ariane G. Wepfer, Rebecca Brauchli, Gregor J. Jenny, & Georg F. Bauer

Institute of Epidemiology, Biostatistics and Prevention

University of Zurich

Abstract

Tims and Bakker (2010) have conceptualized job crafting as a self-initiated job redesign strategy, which can foster employee well-being by improving work characteristics (job demands and resources). The empirical test of this conceptualization showed mixed findings. Tims, Bakker and Derks (2013) found that crafting resources led to increased structural and social resources and increased well-being. They did not find the respective pattern for crafting demands however. Furthermore, their study design was not optimal for testing mediation longitudinally. Therefore, we seek to replicate their study with a study design better suited for meditational analysis. Data came from a longitudinal online study with six-month time intervals between three measurement points. Our sample size was $N = 690$.

Results showed that crafting structural and social resources at t1 led to increased structural and social resources at t2. This increase in resources however was not predictive of changes in well-being at t3 (engagement, exhaustion, work-life conflict). Crafting resources at t1 had a direct effect on increased work engagement at t3, though. No effects were found for crafting hindering demands. Results support Tims and Bakker's (2010) claims for crafting resources but not crafting demands. Further theoretical development and research on crafting demands is needed.

Key words: job crafting, work characteristics, well-being, JD-R model, work-life conflict

Job crafting has been discussed in recent years as a way of complementing or even overcoming the shortcomings of more traditional approaches to job redesign (Demerouti & Bakker, 2014; Oldham & Hackman, 2010; Tims & Bakker, 2010; Wrzesniewski & Dutton, 2001). The individual employee is seen as an active agent, capable of changing his environment so as to produce a better fit between his skills and motivations on the one hand and the characteristics of the work situation on the other hand (Bipp & Demerouti, 2014; Demerouti & Bakker, 2014; Wrzesniewski & Dutton, 2001). Employees are considered the experts concerning their working conditions and therefore it has been argued that more traditional top down job redesign approaches should be combined with interventions that foster employees' bottom up job crafting activities to benefit the organization as well as the individual employee (Bipp & Demerouti, 2014; Demerouti & Bakker, 2014; Tims et al., 2013; Tims & Bakker, 2010).

Wrzesniewski and Dutton (2001, pp. 179) first defined job crafting as 'the physical and cognitive changes individuals make in the task or relational boundaries of their work.' They conceptualize job crafting as (1) changing the content and number of tasks, (2) changing one's cognitive stance towards work and (3) changing social interactions at work. Job crafting has since been reconceptualized within the JD-R framework as employees' self –initiated changes to their work characteristics such as job demands and job resources (Bipp & Demerouti, 2014; Demerouti & Bakker, 2014). Within the JD-R framework, job crafting is theorized to lead to increased resources and increased challenging demands and to decreased hindering demands. These changes in demands and resources in turn are thought to positively affect well-being outcomes (Demerouti & Bakker, 2014; Tims et al., 2013). There have been a couple of studies that have found empirical evidence to underpin these assumed direct effects on well-being. Job crafting has been found to predict *work engagement* (Bakker, Tims, & Derks, 2012; Chen, Yen, & Tsai, 2014; Nielsen & Abildgaard, 2012; Petrou, Demerouti, Peeters, Schaufeli, & Hetland, 2012; Tims, Bakker, & Derks, 2012a; Tims et al., 2013),

burnout (Nielsen & Abildgaard, 2012; Tims et al., 2012, 2013) and *job satisfaction* (Nielsen & Abildgaard, 2012; Tims et al., 2012, 2013). Furthermore, job crafting has been linked to *job performance* (Bakker et al., 2012; Tims et al., 2012a) and *employability* (Tims et al., 2012).

However, only one study has tested longitudinally if job crafting activities can lead to changes in job demands and resources and if these changes in turn lead to improved well-being such as engagement, burnout and work satisfaction (Tims et al., 2013). The pattern of findings was mixed and there were issues with the methodological designs of the study. The current study therefore attempts to overcome these methodological shortcomings and test the theoretical assumption that job crafting has a favorable effect on well-being via the increase of structural and social resources and the decrease of hindering demands.

Theoretical background

The JD-R framework

The job demands and resources model proposes that all work characteristics can be classified as either demands or resources. Further, it proposes two distinct mechanisms that link work characteristics to employees' health and well-being outcomes (Bakker & Demerouti, 2007). Within the JD-R framework, job demands are defined as physical, psychological, social, or organizational aspects of the work situation that require sustained effort or skill. Examples are work pressure, physical demands or emotionally challenging interactions with colleagues, customers, clients or patients. Although job demands are not considered to be negative per se, they can turn into stressors, if employees have to exert sustained effort to meet these demands while lacking the resources required for buffering the health impairing effect. This can eventually lead to burnout or exhaustion and is called the health impairment process. It has been argued that appraisal processes play a role in determining the health impairing potential of job demands (Crawford, Lepine, & Rich, 2010). *Challenging demands* are thought to be

less taxing and foster employee engagement and motivation instead, while *hindering demands* can lead to strain reactions and have no motivational properties (Crawford et al., 2010; Schaufeli & Taris, 2014).

Job resources refer to those physical, psychological, social, or organizational aspects of the work situation that are instrumental for achieving work goals, reducing job demands and the associated costs, or stimulate personal growth, learning and development. Job resources have intrinsic and extrinsic value in stimulating employee motivation and work engagement. This is called the motivational process. Burnout and work engagement in turn are associated with positive organizational outcomes as well as employee well-being (Bakker & Demerouti, 2007; Schaufeli & Taris, 2014). There is ample evidence from cross sectional (Bakker & Demerouti, 2007; Schaufeli & Taris, 2014) and also from a few longitudinal studies (Brauchli, Schaufeli, Jenny, Füllemann, & Bauer, 2013; Hakanen, Schaufeli, & Ahola, 2008; Schaufeli, Bakker, & van Rhenen, 2009) to support the theoretical assumptions of the JD-R model.

Job Crafting within the JDR framework

Wrzesniewski and Dutton (2001) conceptualized job crafting as (1) changing the content and number of tasks, (2) changing one's cognitive stance towards work and (3) changing social interactions at work. Tims and Bakker (2010) have built on this previous work but have reconceptualized job crafting within the JD-R framework to guide research directed at gaining a better understanding of what it is that employees craft (Tims & Bakker, 2010). In their view, job crafting is a self-initiated employee behavior directed at changing *work characteristics* (Tims & Bakker, 2010). They suggested that 'employees may change their levels of job demands and job resources in order to align them with their own abilities and preferences' (Tims & Bakker, 2010; pp. 4). *Figure 1* shows the position of job crafting within the JD-R framework. They further suggested that employees might craft their jobs in three different

ways: (1) by increasing resources, (2) by increasing challenging demands and (3) by decreasing hindering demands.

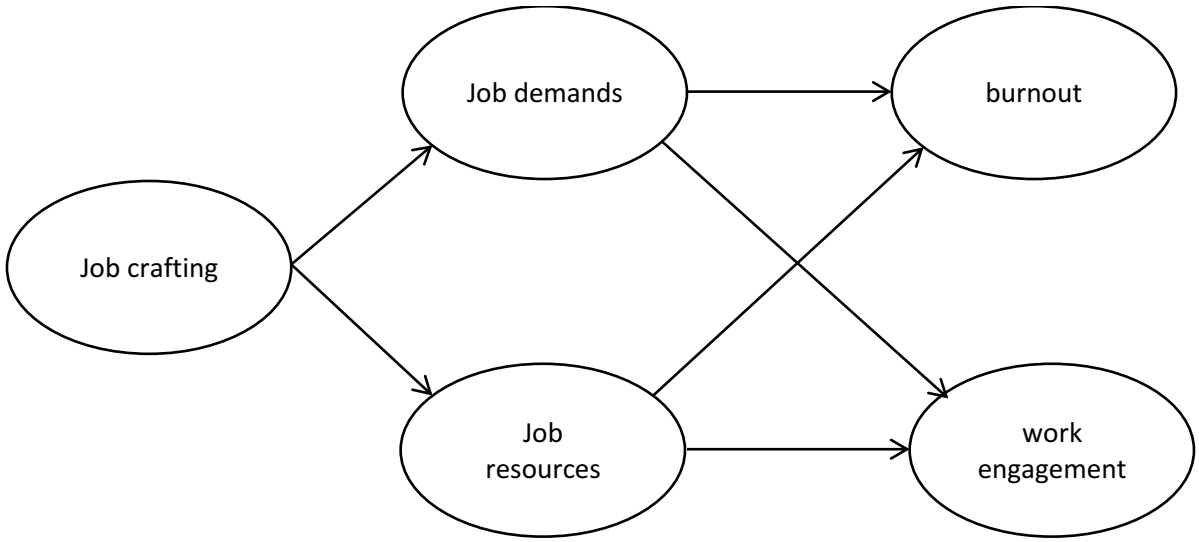

Figure 1. The role of job crafting in the job demands and resources model

Tims, Bakker, & Derks (2012a) developed a measure for job crafting and validated it using several samples of Dutch employees. Their final measure consisted of four instead of the initially suggested three subscales: (1) increasing structural resources and (2) social resources, (3) increasing challenging demands and (4) decreasing hindering demands. The dimensions 'increasing structural resources' and increasing social resources' and 'increasing challenging demands' were found to be positively associated with personal initiative, proactive personality and negatively with cynicism, lending convergent validity to the measure. A test of criterion validity showed these three dimensions to be related to work engagement, employability and job performance. Hence, these three dimensions are clearly in line with their theoretical conceptualization. The dimension of 'decreasing hindering demands' was not fully in line with its theoretical conceptualization. It was found to be related to proactive personality but not personal initiative and it was found to be positively related to cynicism. In

terms of convergent validity, 'decreasing hindering demands' showed no significant relation to work engagement, employability nor job performance.

In a subsequent study, Tims and colleagues (2013) tested the theoretical assumption that job crafting increases job resources and decreases demands on a sample of employees working at a chemical plant in the Netherlands. They found that crafting structural resources predicted an increase of structural resources (autonomy, variety and opportunities for development) and that this increase of structural resources in turn was related to increased well-being (work engagement, job satisfaction and burnout). They also found direct effects of crafting structural resources on job satisfaction (positive) and burnout (negative). In terms of crafting social resources, they found that increasing social resources had an indirect effect on all well-being variables, such that increasing social resources led to increased social resources (social support, feedback, coaching) which in turn predicted increased engagement, job satisfaction and decreased burnout. No direct effects of crafting social resources on well-being outcomes were observed. In the case of crafting challenging demands, they found that this job crafting strategy did not predict increased challenging demands (workload). Meanwhile, there was evidence for a direct link between the job-crafting strategy of increasing challenging demands and increased work engagement and decreased burnout levels. However, an increase in challenging demands was associated with increased burnout. Lastly, the job crafting strategy of decreasing hindering demands did not show a significant effect on change in hindering demands (cognitive demands, emotional demands) and the change in hindering demands did not predict change in well-being. No direct effects of crafting hindering demands on well-being were observed either. Taken together, these results lend support to the theoretical assumption that job crafting activities that are directed toward increasing job resources lead to increased well-being via an actual increase of job resources. The results for job crafting activities that are directed toward job demands seem to suggest that job demands cannot be changed by job crafting activities. The results for crafting challenging demands though seem

to suggest that the proactive stance that this job crafting activity stands for is associated with some well-being outcomes (here increased work engagement and decreased burnout). We believe Tims et al.'s (2013) study was an important first step in testing the theoretical assumption that job crafting activities lead to changes in job characteristics and in turn to gains in employee well-being. However, the design of their study was not perfectly suited to their research questions and led to serious limitations. The study measured changes in work characteristics and well-being between time 1 and 3, whereas job crafting was measured at time 2. They then tested if reported job crafting activities at time 2 were related to changes in job characteristics between time 1 and time 3, and if these changes in work characteristics were associated with changes in well-being during the same time interval. The time lag between measurement points was only one month. Furthermore, they gave participants feedback on their current work characteristics at time 1 and provided them with suggestions how to change their job demands and resources. It can therefore not be determined if employees' self-initiated job crafting activities caused the changes in their job demands and resources or if change in work characteristics was due to the suggestions they got at t1. We therefore believe that Tims et al.'s (2013) research questions need to be retested using a study design and data that is better suited to test the suggested relations longitudinally. This is the aim and purpose of our study.

The current study

The aim of our current study was to investigate if job characteristics can be changed by job crafting activities and if the attained changes in job demands and resources predict changes in well-being over time. To answer these questions, we used data from a panel study on working conditions, work-life issues and health outcomes. The time lags between the three measurement points were six months, so the data covers the time span of an entire year. This allows us to test for long term, sustainable effects of job crafting activities at t1 on changes in

job characteristics at t2 six months later. Furthermore, we can test if these changes in job characteristics have long term, sustainable well-being effects another six months later at t3. Because it was our aim to replicate Tims et al.'s (2013) study with data better suited for testing longitudinal mediation effects, we mirrored their approach as closely as possible. We tested for effects of crafting structural resources, crafting social resources and crafting hindering demands on job characteristics and well-being. Because our study was based on existing data, we were unable to test for effects of crafting challenging demands, for which no measure was included. However, we consider it more vital to include crafting hindering demands because it is the only form of crafting that targets the health impairment process of the JD-R model. Crafting challenging demands and crafting structural and social resources are all aimed at the motivational process. In terms of employee well-being, we included *exhaustion*, the central aspect of burnout (Maslach, Schaufeli, & Leiter, 2001), *work engagement* (Bakker, Albrecht, & Leiter, 2011) and *work-life conflict* (Greenhaus & Beutell, 1985). Work-life conflict arises when pressures from one life role make it difficult to fulfill the demands of another life role (Greenhaus & Beutell, 1985). Greenhaus and Beutell (1985; p. 77) proposed that 'any role characteristic that affects a person's time involvement, strain, or behavior within a role can produce conflict between that role and another role'. Scholars have distinguished work-to-life from life-to-work conflict (Byron, 2005; Greenhaus & Beutell, 1985). In this study, we included work-to-life conflict, because job crafting is concerned with the change of work characteristics and it has been shown, that work domain variables are the main antecedents of work-to-life conflict, while the antecedents of life-to-work conflict are mainly found in the life domain (Byron, 2005). Work-life conflict (here synonymously used with work-to-life conflict) has been found to be associated with work characteristics (Byron, 2005). Many cross sectional studies have found evidence for a positive association of job demands, such as work load and time pressure for example, with work-life conflict and a negative association of job resources such as autonomy and supervisor support with work-life

conflict (Mostert, Peeters, & Rost, 2011; Peeters, Montgomery, Bakker, & Schaufeli, 2005; Schieman, Glavin, & Milkie, 2009). Longitudinal studies have confirmed these findings (Hall, Dollard, Tuckey, Winefield, & Thompson, 2010; Magee, Stefanic, Caputi, & Iverson, 2012). Therefore, we assume that by crafting their jobs and thereby changing their job demands and resources, employees might also decrease their work-life conflict. Furthermore, work-life conflict has been identified as an important predictor of impaired well-being (Greenhaus, Allen, & Spector, 2006; Nohe, Meier, Sonntag, & Michel, 2014). No prior study has tested the effect of job crafting on work-life conflict. Therefore, by including work-life conflict as an outcome variable, our study adds to the literature on job crafting as well as to the literature on work-life conflict, by examining job crafting as an individual level predictor and a potential individual-level strategy for preventing work-life conflict.

Models and Hypotheses

Consistent with Tims and colleagues' (2013) approach, we tested a separate model for every aspect of job crafting. In *model 1*, crafting structural resources predicts increased structural resources, and increased structural resources in turn predict increased well-being, operationalized as work engagement, exhaustion and work-life conflict (compare *Figure 2* in results section). We also included direct paths from job crafting to well-being outcomes in our models because previous studies have found evidence for direct effects of job crafting on well-being outcomes (Bakker, Tims, & Derks, 2012; Nielsen & Abildgaard, 2012; Tims, Bakker, & Derks, 2012; Tims et al., 2013).

Hypothesis 1

a. Crafting structural resources at t1 leads to increased structural resources at t2
b. Increased structural resources at t2 lead to increased employee well-being at t3
c. Crafting structural resources at t1 indirectly predicts increased employee well-being at t3 via increased structural resources at t2.

In *model 2*, crafting social resources predicts increased social resources, and increased social resources in turn predict increased employee well-being (compare *Figure 3* in results section).

Hypothesis 2

a. Crafting social resources at t1 leads to increased social resources at t2
b. Increased social resources at t2 lead to increased employee well-being at t3
c. Crafting social resources at t1 indirectly predicts increased employee well-being at t3 via increased social resources at t2.

In *model 3*, crafting hindering demands predicts decreased hindering demands, and decreased hindering demands in turn predict increased employee well-being (compare Figure 4 in results section).

Hypothesis 3

a. Crafting hindering demands at t1 leads to decreased hindering demands at t2
b. Decreased hindering demands at t2 lead to increased employee well-being at t3
c. Crafting hindering demands at t1 indirectly predicts increased employee well-being at t3 via decreased hindering demands at t2.

Method

Sample and procedure

The data used in this study was collected in a three wave panel study on working conditions, work-life issues and health outcomes in 2013 and 2014. The time interval between each measurement point was six months. Participants had to work at least 20 hours per week and be in the age range of 18 to 65 years in order to be eligible for study participation. They were contacted via an online panel data service and received a minimal incentive for participation (points, which can be redeemed towards a given service after participation in several surveys). 1852 employees completed the t1 measure. At t2, six months after the baseline measurement,

940 still participated in the study. At t3, *N* = 690 participants of those 940 filled in the survey and made up our *final sample*.

All participants came from German-speaking countries, 55.1% of the final sample came from Germany, 23.3% from Switzerland, 32.2% from Austria and 0.4% from an unspecified 'other country.' The sample was representative of the workforce in the respective countries. 63.3% of the study population was male and 36.7% female. The average age was *M* = 41.23 years (*SD* = 8.79). 6.5% had completed secondary education, 38.8 had completed an apprenticeship or professional training, 21.0% held a high school degree, 13.0% a bachelor degree / vocational university degree and 20.6% held a university degree. 11.2% worked 20 to 29 hours per week, 40.1% worked 30 to 39 hours, 41.7% worked 40 to 44 hours and 7.0% worked more than 44 hours per week. The average job tenure was *M* = 86.90 months (*SD* = 80.54). Participants were employed in a broad range of economic sectors and occupations: 10.0% worked in the health and social sector, 11.2% in the public administration / defense / social security sector, 8.8% in trading, 9.6% in the production of goods, 8.4% in information / communication, 6.5% in finance / insurances, 6.7% in technology / science, and 5.2% in education. The remaining study participants were employed in other sectors, such as the real estate market, the hotel and restaurant industry, the transport and construction industry, mining and farming / forestry.

Scales

Job Crafting

Job Crafting was assessed at t1 using a German translation of the subscales 'increasing structural resources' and 'increasing social resources' of the original job crafting scale by Tims, Bakker, & Derks (2012). Crafting hindering demands was measured by a German translation of the 'reducing demands' subscale developed by Petrou et al. (2012) to assess general level job crafting in their study on daily job crafting. The *increasing structural*

resources subscale is comprised of five items. A sample item is: 'I try to develop my capabilities'. The *increasing social resources* subscale consists of five items and a sample item is: 'I ask others for feedback on my job performance.' The *reducing demands* subscale is comprised of four items. A sample item is: 'I try to simplify the complexity of my tasks at work.' Participants were asked to reply to the items on a 5-point Likert-scale. The scale was anchored as 1 = 'strongly disagree', 2 = 'disagree', 3 = 'somewhat agree', 4 = 'agree', 5 = 'strongly agree'.

Job resources and demands

Structural job resources: We assessed autonomy, role clarity, opportunities for development and task variety at t1 and t2. *Autonomy* was assessed with the German version of the control subscale of the HSE management standards indicator tool (Cousins et al., 2004). The control subscale consists of four items. A sample item is: 'I have a choice in deciding what I do at work.' *Role clarity* was also assessed with a subscale of the German version of the HSE management standard indicator tool. The scale is comprised of 5 items. A sample item is: 'I am clear what my duties and responsibilities are.' *Opportunities for development* were measured with a subscale of the SALSA (Rimann & Udris, 1997). The three items were worded as follows (translation by first author): 'My job enables me to develop my skills', 'My job offers opportunities for professional development', and 'My job allows me to learn new things.' *Task variety* was also assessed with a subscale of the SALSA (Rimann & Udris, 1997). The three items read as follows (translation by first author): 'In my job, tasks vary every day', 'In my job tasks are very diverse', 'In my job, I do the same thing every day' (reverse coded). Participants were asked to reply to the items of all four subscales on a 5-point Likert-scale. The scale was anchored as 1 = 'strongly disagree', 2 = 'disagree', 3 = 'somewhat agree', 4 = 'agree', 5 = 'strongly agree'.

Social job resources: We measured *colleague support* and *managerial support* to assess social job resources at t1 and t2. Both were measured using subscales from the German version of the HSE management standard indicator tool (Cousins et al., 2004). A sample item from the *work colleague support* subscale is: 'I get the help and support I need from colleagues.' A sample item from the *managerial support* subscale is: 'I can rely on my line manager to help me out with a work problem.' Participants were asked to reply to the items of both subscales on a 5-point Likert-scale. The scale was anchored as 1 = 'strongly disagree', 2 = 'disagree', 3 = 'somewhat agree', 4 = 'agree', 5 = 'strongly agree'.

Work demands: We assessed quantitative and qualitative work demands at t1 and t2. *Quantitative demands* were measured using the eight item demand subscale of the German version of the HSE management standards indicator tool (Cousins et al., 2004). A sample item is: 'I have to neglect some tasks, because I have too much to do.' Some might argue that quantitative demands capture work load which is sometimes considered a challenging demand (Crawford et al., 2010). However the items focus on unrealistic work goals and work overload that employees feel they are unable to deal with. The table of correlations of measurement waves furthermore shows that t1 and t2 demands are correlated positively with t2 and t3 exhaustion and negatively with t2 and t3 engagement. This correlational pattern is in line with the expected pattern for hindrance demands. Challenging demands instead have been found to be positively associated with engagement and exhaustion (Crawford et al., 2010; Schaufeli & Taris, 2014). *Qualitative demands* were measured using a subscale from the SALSA (Rimann & Udris, 1997). The three items were worded as follows (translation by first author): 'In my job I have to do tasks that are too complicated for me', 'At times, my job is too difficult for me', 'In my job, I'm expected to perform tasks for which I'm not adequately trained.' Participants were asked to reply to the items of both subscales on a 5-point Likert-scale. The scale was anchored as 1 = 'strongly disagree', 2 = 'disagree', 3 = 'somewhat agree', 4 = 'agree', 5 = 'strongly agree'.

Well-being

Work engagement was measured at t2 and t3, using the German version of the nine-item short version of the UWES (Schaufeli, Bakker, & Salanova, 2006). A sample item is: 'At my job, I feel strong and vigorous.' Participants were asked to rate the items on a 7-point frequency rating scale ranging from 0 = 'never' to 6 = 'always.'

Exhaustion was measured at t2 and t3 with the burnout subscale from the German version of the second edition of the COPSOQ (Copenhagen Psychosocial Questionnaire; Pejtersen, Kristensen, Borg, & Bjorner, 2010; German version: Nübling, Stössel, & Michaelis, 2010). Participants were asked to indicate feelings of exhaustion during the past four weeks on a Likert-scale with the following anchors: 1 = 'never', 2 = 'rarely', 3 = 'sometimes', 4 = 'often', 5 = 'always'. A sample item is: 'How often have you felt worn out?' The scale consists of four items.

Work-life conflict was measured at t2 and t3 using four items from the negative work-home interaction subscale from the German version of the SWING-scale (Geurts et al., 2005). Participants are asked to answer on a 4-point Likert-scale to the item stem 'How often does it happen that …' A sample item is: '… You find it difficult to fulfill your domestic obligations because you are constantly thinking about your work?' The scale is anchored as follows: 1 = 'never', 2 = 'sometimes', 3 = 'often', 4 = 'always'. The four items were chosen because they are part of the S-Tool. The S-Tool is a scientifically developed and validated instrument for companies to measure the occurrence of stress via a web-based questionnaire provided by Health Promotion Switzerland (2011).

Control variables Participants' *age* was assessed in years. *Gender* was coded as 1 = 'male' and 2 = 'female'. Highest level of *education* was assessed with the following categories: 1 = 'no degree', 2 = 'secondary education', 3 = 'apprenticeship/professional training', 4 = 'high school degree', 5 = 'Bachelor degree/vocational university degree' and 6 = 'university degree'. Participants further indicated how many *hours* they work per week. The answering

categories were given as 1 = '20 to 29 hours per week', 2 = '30 to 39 hours per week', 3 = 40 to 44 hours per week' and 4 = 'more than 44 hours per week.' *Job tenure* was coded in number of months in the current job.

Analysis

AMOS 21 was used to conduct structural equation modeling. We chose the same analytic approach as Tims, Bakker, & Derks (2013) in their study. Scale items of the respective job crafting subscales were used as indicators of the latent job crafting variables. We obtained latent change variables for structural and social resources and job demands by first calculating mean scores for t1 and t2. We then regressed t2 mean scores on t1 scores and saved the standardized residuals. The standardized residuals represent the latent change variables and are more reliable than simple difference scores (Tims et al., 2013; Williams, Zimmermann, & Mazzagatti, 1987). The latent change variables for our well-being outcomes were obtained by regressing t3 work engagement, exhaustion and work-life conflict on their t3 counterparts and saving the standardized residuals. We first tested the measurement model before testing the respective structural model. Age, gender, education, hours and tenure were controlled for if zero-order correlations with study variables were significant. Only significant paths were included in the final model. The error terms of the well-being variables were allowed to correlate because it seems plausible that any single model or any single dimension of job crafting does not explain all changes in well-being.

Results

Preliminary Analyses

A test for selective dropouts revealed that men were more likely to participate in all three waves: 63.3% of those who participated in all three waves were male, compared to 58.9% of those who participated in the first wave only ($\chi^2_{(1)} = 15.57$, $p < .001$). Further, participants

responding to all three waves were older, with a mean of 41.23 years compared to a mean of 38.7 years ($F_{(1)} = 30.32$, $p < .001$). Those who dropped out had slightly more support from their work colleagues at t1 than those participants who replied to all three measurement points ($M = 3.74$ vs. $M = 3.65$ respectively; $F_{(1)} = 4.90$, $p = .03$) and they reported slightly higher crafting structural resources ($M = 3.89$ vs. $M = 3.78$ respectively; $F_{(1)} = 11.34$, $p = .001$). Those who dropped out also reported being slightly less exhausted at t2 ($M = 2.99$ vs. $M = 2.89$; $F_{(1)} = 4.68$, $p = .03$). It is important to keep this in mind when interpreting our findings.

Descriptive Statistics

Table 1 shows the correlations, means and standard deviations among study variables. While crafting structural and social resources was correlated with changes in structural and social resources but not changes in hindering demands, crafting hindering demands was not correlated with changes in resources or demands. While crafting structural and social resources was correlated with changes in work engagement, crafting hindering demands was positively correlated with changes in work-life conflict, which is counter to what we would expect. Changes in demands and resources were not correlated with changes in well-being or in the case of changes in structural resources, the correlation with changes in work engagement went in the opposite direction from what we had expected.

Table 1. Means, standard deviations and correlations ($N = 690$)

	M	*SD*	1	2	3	4	5	6	7	8	9
Study variables											
1. Crafting struct JR t1	3.78	.70									
2. Crafting soc JR t1	2.60	.68	.32***								
3. Crafting hind. JD t1	2.81	.69	.14***	.26***							
4. Δ struct JR t1-t2	0.00	1.00	.10**	.16***	.02						
5. Δ soc JR t1-t2	0.00	1.00	.08*	.12*	.02	.46***					
6. Δ hind. JD t1-t2	0.00	1.00	-.03	.02	.03	.00	-.12***				
7. Δ engagement t2-t3	0.00	1.00	.19***	.09*	-.01	.02	-.08*	-.06			
8. Δ exhaustion t2-t3	0.00	1.00	.04	-.07	.00	.02	.00	.03	-.15***		
9. Δ wlc t2-t3	0.00	1.00	.03	.02	.09*	.00	-.01	.01	-.06	.26***	
Control variables											
Age	41.2	8.79	.05	-.11**	.01	.01	.00	-.10*	.08*	-.04	-.05
Gender			.06	.01	-.13**	.03	.05	-.01	.05	.07	.02
Education			.14***	.09*	-.08*	.05	.02	.02	.08*	-.04	.06
Hours			.02	.05	.06	-.07	-.08*	.01	.06	.00	.06
Tenure	86.9	80.5	-.01	-.13***	-.03	.00	-.03	-.05	.00	-.02	.01

Note. Δ = standardized residuals from regressing T3 variables on T2 variables; struct = structural, soc = social, JR = job resources, hind. = hindering, JD = job demands, wlc = work-life conflict; * = $p < .05$, ** = $p < .01$, *** = $p < .001$.

Table 2 shows the correlations of variables between measurement waves. Note that crafting structural and social resources at t1 was correlated with existing structural and social resources but not demands at t1. Crafting hindering demands at t1 however was correlated with social resources and hindering demands at t1 and negatively with structural resources at t1. The same correlational pattern could be found between job crafting at t1 and t2 demands and resources. Crafting resources at t1 was positively correlated with engagement and negatively with exhaustion at t2 but not with work-life conflict at t2. Crafting demands showed no zero-order correlation with any well-being indicator

Table 2. Correlations between measurement waves

	1	2	3	4	5	6	7	8	9	10	11	12	13	14
1. Crafting struct JR t1														
2. Crafting soc JR t1	0.32***													
3. Reducing JD t1	0.14***	0.26***												
4. Struct JR t1	0.65***	0.27***	0.06											
5. Soc JR t1	0.39***	0.49***	0.04	0.58***										
6. JD T1	-0.08*	0.16***	0.14***	-0.12**	-0.22***									
7. Struct JR t2	0.55***	0.31***	0.06	0.75***	0.49***	-0.14***								
8. Soc JR t2	0.34***	0.44***	0.04	0.45***	0.75***	-0.23***	0.58***							
9. JD t2	-0.08*	0.13***	0.12***	-0.10**	-0.16***	0.72***	-0.12**	-0.22***						
10. Engagement t2	0.48***	0.38***	0.04	0.53***	0.46***	-0.16***	0.62***	0.51***	-0.13***					
11. Exhaustion t2	-0.15***	-0.09*	0.04	-0.25***	-0.25***	0.34***	-0.34***	-0.37***	0.42***	-0.38***				
12. Work-life conflict t2	-0.05	0.04	0.04	-0.15***	-0.24***	0.48***	-0.20***	-0.30***	0.57***	-0.18***	0.52***			
13. Engagement t3	0.49***	0.34***	0.02	0.52***	0.47***	-0.17***	0.57***	0.44***	-0.15***	0.76***	-0.34***	-0.17***		
14. Exhaustion t3	-0.06	-0.11*	0.03	-0.15***	-0.21***	0.29***	-0.20***	-0.27***	0.33***	-0.28***	0.64***	0.47***	-0.32***	
15. Work-life conflict t3	-0.01	0.04	0.09*	-0.09*	-0.22***	0.48***	-0.13***	-0.25***	0.50***	-0.12***	0.45***	0.68***	-0.14***	0.53***

Note. struct = structural, soc = social, JR = job resources, JD = job demands; * = p < .05, ** = p < .01, *** = p < .001.

Structural resources

The initial fit of the measurement model was not satisfactory. Modification indices suggested that fit would improve if the error term of items 5 (I decide on my own how I do things) of the crafting structural resources scale was allowed to correlate with the error terms of items 2 (I try to develop myself professionally) and 4 (I make sure that I use my capacities to the fullest). We decided to allow these errors to correlate because apart from crafting structural resources, these three items seem to tap into the theme of need for autonomy. We realize that this might obscure the real underlying structure of covariance (Gerbing & Anderson, 1984) but because this is a validated scale (Tims et al., 2012) that has been used previously we did not want to change it. Furthermore we were only interested in the indicator covariation that represents structural job crafting and therefore did not model this unwanted indicator covariation explicitly as a second latent factor but simply accounted for it by allowing correlated errors. The correlated errors might be attributable to the translation of the items from English to German and we will come back to this in the discussion section. This new measurement model fit the data well ($\chi^2/df = 2.85$, $df = 26$, $p < .001$; $NFI = .96$; $CFI = .97$; $RMSEA = .05$). Our final model is depicted in *Figure 1* and showed good fit ($\chi^2/df = 2.35$, $df = 27$, $p < .001$; $NFI = .96$; $CFI = .98$; $RMSEA = .04$). In line with hypothesis 1, crafting structural resources at T1 predicted an increase in structural resources from t1 to t2 ($\beta = .08$, $p < .05$). But this increase in structural resources did not predict changes in well-being from t2 to t3 (engagement: $\beta = .01$, $p = .89$; exhaustion: $\beta = .02$, $p = .066$; work-life conflict: $\beta = -.01$, $p = .83$). Therefore, we did not test for indirect effects. There was one significant direct effect of job crafting on a well-being outcome, however. Crafting structural resources at t1 did predict an increase in work engagement from t2 to t3 ($\beta = .20$, $p < .001$).

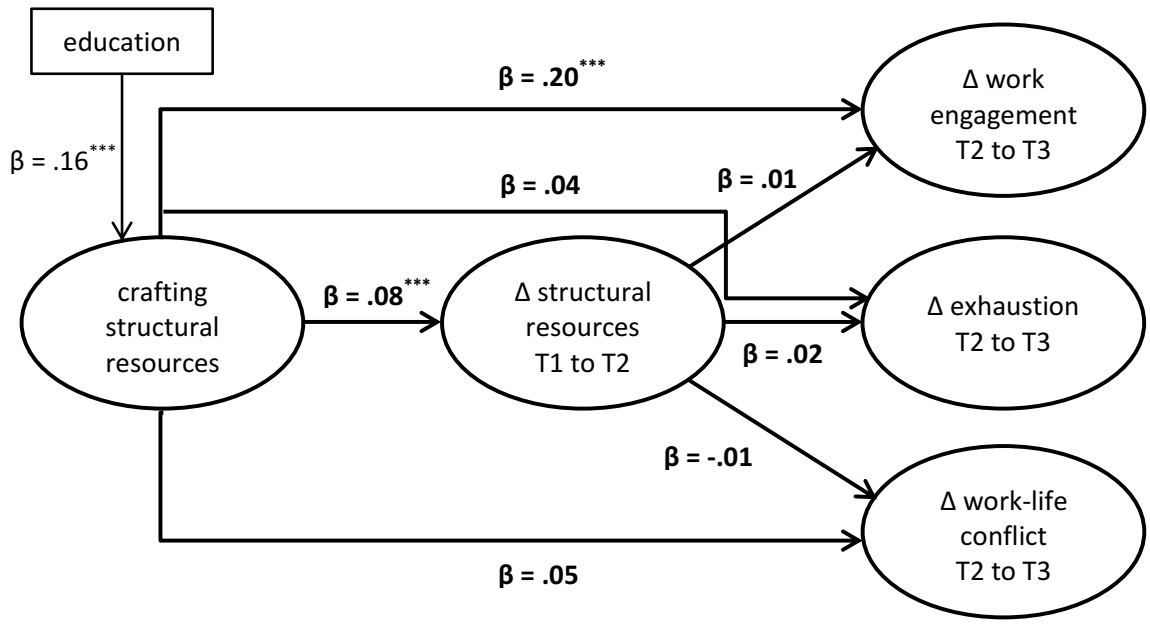

Figure 2. Results for hypothesis 1: Crafting structural job resources results in an increase in structural job resources, which predicts increased well-being.

Social resources

An initial test of the measurement model for crafting structural resources indicated unsatisfactory fit. The fit improved significantly when the error term of item 2 (I ask whether my supervisor is satisfied with my work) was allowed to correlate with the error terms of item 4 (I ask others for feedback on my job performance) and item 5 (I ask colleagues for advice). Because all three items could potentially capture an insecurity aspect, we allowed these errors to correlate (compare argumentation for correlated errors of crafting structural resources subscale). This new measurement model showed good fit to the data ($\chi^2/df = 2.28$, $df = 26$, $p < .001$; *NFI* = .95; *CFI* = .97; *RMSEA* = .04). Our final model is depicted in *Figure 2*. The model fit the data well ($\chi^2/df = 1.50$, $df = 36$, $p = .03$; *NFI* = .95; *CFI* = .98; *RMSEA* = .03). In line with hypothesis 2, crafting social resources at t1 was predictive of increased social resources at t2 ($\beta = .14$, $p = .001$). An increase of social resources from t1 to t2 in turn,

predicted decreased work engagement at t3 (β = -.09, p < .05), which is contrary to our hypothesis. The change in social resources between t2 and t3 was not predictive of the other two well-being outcomes (exhaustion: β = .01, p = .78; work-life conflict: β = -.01, p = .80). There was also a significant direct effect of crafting social resources on work engagement (β = .10, p = .02). The 95% confidence interval based on 1000 bootstrap samples with maximum likelihood estimation for the indirect effect of crafting social job resources on work engagement did not include zero (Bootstrap estimate = -.04, CI = -.110 to -.003). We therefore conclude that crafting social resources has a positive direct effect on work engagement and a negative indirect effect via increased social resources.

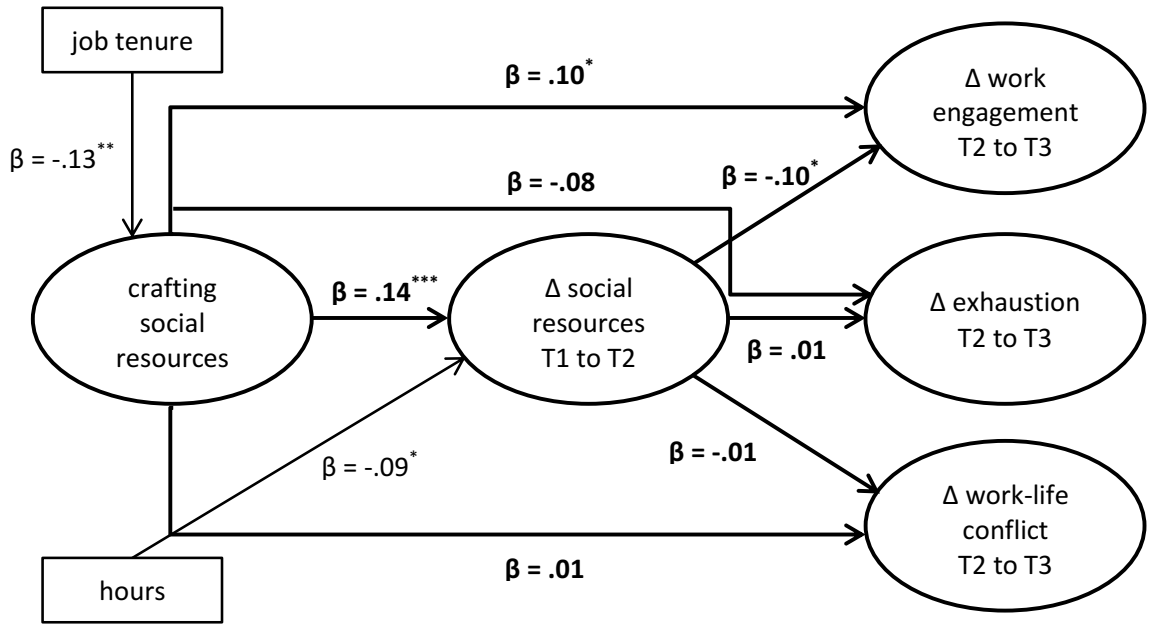

Figure 3. Results for hypothesis 2: Crafting social job resources results in an increase in social job resources, which predicts increased well-being.

Hindering demands

The measurement model fit the data very well (χ^2/df = 1.29, df = 21, p = .16; NFI = .95; CFI = .99; $RMSEA$ = .02). *Figure 3* depicts the final model, which also showed good fit (χ^2/df =

1.56, *df* = 36, *p* = .02; *NFI* = .91; *CFI* = .97; *RMSEA* = .03). Except for the control variables, none of the paths were significant. So we rejected hypothesis 3, which predicted that crafting hindering demands at T1 would predict a decrease in work demands between t1 and t2 which in turn would lead to improved well-being from t2 to t3.

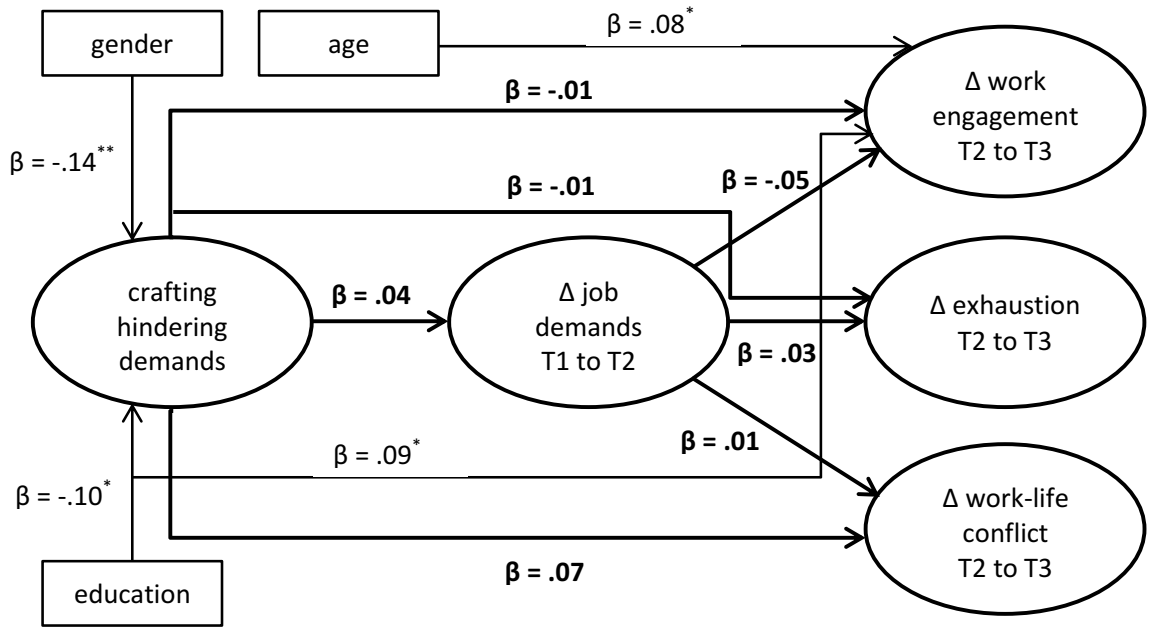

Figure 4. Results for hypothesis 3: Crafting hindering job demands results in a decrease in hindering demands, which predicts increased well-being.

Discussion

It was the aim of our study to investigate if job characteristics can be changed by job crafting activities and if the attained changes in job demands and resources predict changes in well-being over time. This research question had been addressed previously by Tims et al. (2013) and they received a mixed picture of findings. Our study intended to retest and clarify their findings, using a longitudinal study design better suited for testing mediation. Furthermore, based on theoretical reasoning, we included work-life conflict as a possible positive outcome of job crafting.

We tested three models. In *model 1*, crafting structural resources was hypothesized to predict increased structural resources, and increased structural resources in turn was hypothesized to predict increased well-being, operationalized as work engagement, exhaustion and work-life conflict. We found that crafting structural resources leads to increased structural resources over a six month period. There was no evidence for an indirect effect of crafting structural resources on increased employee well-being though, due to the missing effect of increased structural resources on increased employee well-being. However, we did find some evidence for a direct effect; employees who reported higher levels of crafting structural resources at t1 reported increased work engagement at t3. Taken together, we were able to replicate Tims et al.'s (2013) finding, that crafting structural resources leads to an increase in structural resources. We were not able to replicate their finding of an indirect effect of crafting structural resources on employee well-being via increased structural resources.

In *model 2*, crafting social resources was hypothesized to predict increased social resources, and increased social resources in turn were predicted to increase employee well-being. Our findings showed that crafting social resources leads to increased social resources six months later. There was an indirect effect of crafting social resources on work engagement, but it was in the opposite direction than expected. An increase of social resources at t2 was associated negatively with increased work engagement at t3, making the indirect effect of crafting social resources on work engagement negative, too. This finding is very puzzling, because it is neither in line with theoretical expectations nor with Tims et al.'s (2013) findings, which support the existence of a positive indirect effect. However, because there is sufficient evidence to show that social resources are predictive of work engagement (Crawford et al., 2010; Schaufeli et al., 2009), we do not further interpret this single contradictory finding. Apart from the negative indirect effect, crafting social resources at t1 had a positive direct effect on increased work engagement at t3.

In *model 3*, crafting hindering demands was hypothesized to predict decreased hindering demands, and decreased hindering demands in turn were thought to be predictive of increased employee well-being. We did not find evidence, that crafting hindering demands at t1 leads to decreased hindering demands six months later. We also did not find any indirect or direct effects of crafting hindering demands on our employee well-being variables: work engagement, exhaustion and work-life conflict. This is in line with Tims et al.'s (2013) findings. They too, did not find any evidence to support their theoretical notion that employees can actually decrease their hindering demands across time using job crafting activities. They also did not find evidence for a beneficial health impact of decreased hindering demands. A recent study of employee-work colleague dyads even found evidence, that crafting hindering demands led to increased workload, conflict and burnout for work colleagues but failed to bring about changes in workload for employees (Tims, Bakker, & Derks, 2015).

Taken together, we found evidence, that job crafting behavior directed at resources leads to increased job resources over a period of six months. We also find crafting behavior, directed at resources, to be positively associated with increased work engagement one year later. This suggests that job crafting has positive motivational effects and therefore can be said to foster positive work-related health outcomes. This is partly in line with Tims et al.'s (2013) pattern of results. They only found a direct effect of job crafting on work engagement for crafting structural resources but not social resources. A study by Nielsen and Abildgaard (2012) did not find job crafting to impact any well-being outcomes (engagement, job satisfaction & burnout) 12 months later, when base line levels of employee well-being were controlled for. However, their data came from blue collar employees who all worked for the same company. It is therefore conceivable that some uncontrolled factors on the organizational level might have corrupted the effect of crafting resources on work engagement. In the meantime, the fact that they did not find effects of job crafting on job satisfaction and burnout when controlling

for baseline levels, is in line with our findings. Apart from the effect on work engagement, we did not find any job crafting dimension to have a direct or indirect positive effect on our well-being indicators.

Although theoretically plausible, we did not find evidence, that job crafting has a beneficial impact on work-life conflict over time. This might be, because work-life conflict is more closely linked to job demands than resources (Bakker & Geurts, 2004; Voydanoff, 2004) and we did not find effects for crafting hindering demands in general. It might also be that effects of job crafting on work-life conflict are more likely to occur when crafting activities are specifically undertaken with the aim of preventing work-life conflict. In our study, we did not have the data to address this possibility.

Limitations and future research

Like every other research, our study has certain limitations. Firstly, due to the fact that our study was conducted using existing data, we were not able to test a model for crafting challenging demands, because our data set did not include any measures of challenging demands. Because Tims et al.'s (2013) results for crafting challenging demands were not in line with their theoretical expectations, this job crafting dimension needs further scrutiny in order to understand its dynamics. Secondly, we used data from three measurement points with six-month time lags in between. This allowed us to test for sustainable long-term effects of job crafting on job demands and resources and employee well-being. However, it is conceivable, that job-crafting dimensions differ in how long it takes to see effects in job characteristics and employee well-being. It is possible, that it takes longer to see changes in job resources as a result of employees' crafting efforts, and that changes in job demands attributable to crafting strategies are better observable in a shorter time frame. Two previous studies lend support to this speculation. Brauchli et al. (2013) found job resources to be more stable over time than job demands. Furthermore, in a diary study by Petrou et al. (2012) that

investigated the effect of day-level job crafting found evidence that day-level reducing demands was negatively associated with day-level work engagement. In addition, the fact that we did not find changes in demands and resources to predict changes in well-being six months later – in fact we found one effect in the wrong direction – suggests that we might have used the wrong time frame to observe such changes. Previous studies have looked at concurrent change of work characteristics and well-being between t1 and t2 (Schaufeli et al., 2009; Tims et al., 2013) or at the relation of t1 work characteristics with change in well-being between t1 and t2 (Hakanen et al., 2008). A study that distinguished between stable and changing components of study variables found no cross-lagged effects of work demands and resources on burnout and engagement one year later (Brauchli et al., 2013). The question remains: Do changes in work characteristics, brought about by job crafting, predict future changes in employee well-being and if so, how long does it take for these changes to occur? Or do changes in well-being simply occur alongside changes in work characteristics? More research is needed to elucidate this issue. Thirdly, the crafting structural and social resources subscales showed some unwanted error correlations, which is a serious methodological problem. Because the scales are validated and have been used successfully by other researchers, we were surprised by this problem and reckoned that it might have to do with the translation of the items. This calls for a thorough test and validation of a German version of the job crafting scale. Lastly, our models only included either resources or demands for the prediction of employee well-being. It has often been demonstrated though, that demands and resources combine to determine well-being outcomes (Schaufeli & Taris, 2014). Future studies should therefore test models that simultaneously include job demands and resources to test if job crafting indirectly predicts employee well-being via changes in demands and resources.

Strengths and contribution

A clear strength of our study is the longitudinal design suited for testing mediational effects. Our data from a three wave panel study with a diverse and representative sample of 690 employees from German speaking countries allows us to feel confident in the results we obtained. A second strength is the time lag of six months in between measurement points. This comparatively long time lag allowed us to test for and detect long-term changes in work characteristics as a result of employee-initiated job crafting activities.

Our study contributes to the existing literature on job crafting by testing one of the key theoretical assumptions of Tims and Bakker (2010): The assumption that employees craft their jobs by crafting their work characteristics. Our findings support Tims et al.'s (2013) findings that structural and social resources can be increased by proactive job crafting strategies and corroborate the usefulness of the conceptualization of job crafting as directed towards job resources. Our results also support Tims et al.'s (2013) finding that crafting job demands does not lead to changes in job demands. This raises a couple of research questions scholars interested in job crafting should address. First, it might be that demands are harder to change than resources because they are more strongly determined by external factors and therefore, crafting (hindering) demands might be more of a coping strategy than an active self-initiated strategy for job redesign. Or maybe changes in demands due to crafting activities are very short lived because they are soon off set by external influences. This would call the conceptualization of crafting job demands as a self-initiated job redesign strategy into question. Second, the time frame for observing changes and associated consequences of crafting demands might be very critical and our study and Tims et al.'s study (2013) might have used the wrong time frames. Third, it might be that the operationalization of job crafting needs further development (Petrou et al., 2012).

The fact that we consistently find crafting activities directed at resources to be associated with changes in work engagement one year later but not with exhaustion or work-life conflict,

suggests that crafting resources is actively contributing to the motivational side of the JD-R model but not to the health impairment side. This contributes to the understanding of job crafting on a theoretical level.

In conclusion we would say that job crafting conceptualized as directed at job resources is useful in helping to understand how employees can actively initiate a long-term positive motivational process. In terms of job crafting as directed at job (hindering) demands, we suggest that further conceptual and empirical work needs to be done to determine the validity and usefulness of this dimensions of job crafting.

References

Bakker, A. B., Albrecht, S. L., & Leiter, M. P. (2011). Key questions regarding work engagement. *European Journal of Work and Organizational Psychology*, *20*(1), 4–28. doi:10.1080/1359432X.2010.485352

Bakker, A. B., & Demerouti, E. (2007). The Job Demands-Resources model: state of the art. *Journal of Managerial Psychology*, *22*(3), 309–328. doi:10.1108/02683940710733115

Bakker, A. B., & Geurts, S. A. E. (2004). Toward a Dual-Process Model of Work-Home Interference. *Work and Occupations*, *31*(3), 345–366. doi:10.1177/0730888404266349

Bakker, A. B., Tims, M., & Derks, D. (2012). Proactive personality and job performance: The role of job crafting and work engagement. *Human Relations*, *65*(10), 1359–1378. doi:10.1177/0018726712453471

Bipp, T., & Demerouti, E. (2014). Which employees craft their jobs and how? Basic dimensions of personality and employees' job crafting behaviour. *Journal of Occupational and Organizational Psychology*. doi:10.1111/joop.12089

Brauchli, R., Schaufeli, W. B., Jenny, G. J., Füllemann, D., & Bauer, G. F. (2013). Disentangling stability and change in job resources, job demands, and employee well-

being — A three-wave study on the Job-Demands Resources model. *Journal of Vocational Behavior*, *83*(2), 117–129. doi:10.1016/j.jvb.2013.03.003

Byron, K. (2005). A meta-analytic review of work–family conflict and its antecedents. *Journal of Vocational Behavior*, *67*(2), 169–198. doi:10.1016/j.jvb.2004.08.009

Chen, C.-Y., Yen, C.-H., & Tsai, F. C. (2014). Job crafting and job engagement: The mediating role of person-job fit. *International Journal of Hospitality Management*, *37*, 21–28. doi:10.1016/j.ijhm.2013.10.006

Cousins, R., MacKay, C. J., Clarke, S. D., Kelly, C., Kelly, P. J., & McCaig, R. H. (2004). 'Management Standards' work-related stress in the UK: practical development. *Work & Stress*, *18*(2), 113–136. doi:10.1080/02678370410001734322

Crawford, E. R., Lepine, J. A., & Rich, B. L. (2010). Linking job demands and resources to employee engagement and burnout: a theoretical extension and meta-analytic test. *The Journal of Applied Psychology*, *95*(5), 834–48. doi:10.1037/a0019364

Demerouti, E., & Bakker, A. B. (2014). Job Crafting. In M. C. W. Peeters, J. De Jonge, & T. W. Taris (Eds.), *An Introduction to Contemporary Work Psychology* (1st Ed., pp. 414 – 433). John Wiley & Sons.

Gerbing, D. W., & Anderson, J. C. (1984). On the Meaning of within-Factor Correlated Measurement Errors. *Journal of Consumer Research*, *11*(1), 572. doi:10.1086/208993

Geurts, S. A. E., Taris, T. W., Kompier, M. A. J., Dikkers, J. S. E., Van Hooff, M. L. M., & Kinnunen, U. M. (2005). Work-home interaction from a work psychological perspective: Development and validation of a new questionnaire, the SWING. *Work & Stress*, *19*(4), 319–339. doi:10.1080/02678370500410208

Greenhaus, J. H., Allen, T. D., & Spector, P. E. (2006). 'Health Consequences of Work-Family Conflict: The Dark Side of the Work-Family Interface.' In P. L. Perrewé & D. C. Ganster (Eds.), *Research in Occupational Stress and Well-being, Volume 5: Employee*

Health, Coping and Methodologies (pp. 61 – 98). Emerald Group Publishing Limited. doi:10.1016/S1479-3555(05)05002-X

Greenhaus, J. H., & Beutell, N. J. (1985). Sources of Conflict Between Work and Family Roles. *Academy of Management Review*, *10*(1), 76–88. doi:10.5465/AMR.1985.4277352

Hakanen, J. J., Schaufeli, W. B., & Ahola, K. (2008). The Job Demands-Resources model: A three-year cross-lagged study of burnout, depression, commitment, and work engagement. *Work & Stress*, *22*(3), 224–241. doi:10.1080/02678370802379432

Hall, G. B., Dollard, M. F., Tuckey, M. R., Winefield, A. H., & Thompson, B. M. (2010). Job demands, work-family conflict, and emotional exhaustion in police officers: A longitudinal test of competing theories. *Journal of Occupational and Organizational Psychology*, *83*(1), 237–250. doi:10.1348/096317908X401723

Health Promotion Switzerland. (2011). S-Tool: The Stress Barometer. Retrieved from: https://www.s-tool.ch/index.php?page=stool&page_lang_id=3.

Magee, C. A., Stefanic, N., Caputi, P., & Iverson, D. C. (2012). The association between job demands/control and health in employed parents: the mediating role of work-to-family interference and enhancement. *Journal of Occupational Health Psychology*, *17*(2), 196–205. doi:10.1037/a0027050

Maslach, C., Schaufeli, W. B., & Leiter, M. P. (2001). Job Burnout. *Annual Review of Psychology*, *52*(1), 397–422. doi:10.1146/annurev.psych.52.1.397

Mostert, K., Peeters, M., & Rost, I. (2011). Work-home interference and the relationship with job characteristics and well-being: A South African study among employees in the construction industry. *Stress and Health*, *27*. doi:10.1002/smi.1374

Nielsen, K., & Abildgaard, J. S. (2012). The development and validation of a job crafting measure for use with blue-collar workers. *Work and Stress*, *26*(4), 365–384. doi:10.1080/02678373.2012.733543

Nohe, C., Meier, L. L., Sonntag, K., & Michel, A. (2015). The chicken or the egg? A meta-analysis of panel studies of the relationship between work–family conflict and strain. *Journal of Applied Psychology*, *100*(2), 522–536. doi:10.1037/a0038012

Nübling, M., Stössel, U., & Michaelis, M. (2010). Belastungen am Arbeitsplatz: Die deutsche Standardversion des COPSOQ (Copenhagen Psychosocial Questionnaire). In *Fehlzeiten-Report 2009* (pp. 253–261). Berlin Heidelberg: Springer.

Oldham, G. R., & Richard Hackman, J. (2010). Not what it was and not what it will be: The future of job design research. *Journal of Organizational Behavior*. doi:10.1002/job.678

Peeters, M. C. W., Montgomery, A. J., Bakker, A. B., & Schaufeli, W. B. (2005). Balancing Work and Home: How Job and Home Demands Are Related to Burnout. *International Journal of Stress Management*, *12*(1), 43–61. doi:10.1037/1072-5245.12.1.43

Pejtersen, J. H., Kristensen, T. S., Borg, V., & Bjorner, J. B. (2010). The second version of the Copenhagen Psychosocial Questionnaire. *Scandinavian Journal of Public Health*, *38*(3 Suppl), 8–24. doi:10.1177/1403494809349858

Petrou, P., Demerouti, E., Peeters, M. C. W., Schaufeli, W. B., & Hetland, J. (2012). Crafting a job on a daily basis: Contextual correlates and the link to work engagement. *Journal of Organizational Behavior*, *33*(8), 1120–1141. doi:10.1002/job.1783

Rimann, M., & Udris, I. (1997). Subjektive Arbeitsanalyse: Der Fragebogen SALSA. In E. Ulich (Ed.), *Unternehmen arbeitspsychologisch bewerten. Ein Mehr-Ebenen-Ansatz unter besonderer Berücksichtigung von Mensch, Technik und Organisation* (Vol. 1, pp. 281–298). Zürich: vdf Hochschulverlag.

Schaufeli, W. B., Bakker, A. B., & Salanova, M. (2006). The Measurement of Work Engagement With a Short Questionnaire: A Cross-National Study. *Educational and Psychological Measurement*, *66*(4), 701–716. doi:10.1177/0013164405282471

Schaufeli, W. B., Bakker, A. B., & Van Rhenen, W. (2009). How changes in job demands and resources predict burnout, work engagement, and sickness absenteeism. *Journal of Organizational Behavior*, *30*(7), 893–917. doi:10.1002/job.595

Schaufeli, W. B., & Taris, T. W. (2014). A Critical Review of the Job Demands-Resources Model: Implications for Improving Work and Health. In G. F. Bauer & O. Hämmig (Eds.), *Bridging Occupational, Organizational and Public Health* (pp. 43 – 68). Dordrecht: Springer Netherlands. doi:10.1007/978-94-007-5640-3

Schieman, S., Glavin, P., & Milkie, M. a. (2009). When Work Interferes with Life: Work-Nonwork Interference and the Influence of Work-Related Demands and Resources. *American Sociological Review*, *74*(6), 966–988. doi:10.1177/000312240907400606

Tims, M., & Bakker, A. B. (2010). Job crafting: Towards a new model of individual job redesign. *SA Journal of Industrial Psychology*, *36*(2), 1 – 9. doi:10.4102/sajip.v36i2.841

Tims, M., Bakker, A. B., & Derks, D. (2012). Development and validation of the job crafting scale. *Journal of Vocational Behavior*, *80*(1), 173–186. doi:10.1016/j.jvb.2011.05.009

Tims, M., Bakker, A. B., & Derks, D. (2013). The impact of job crafting on job demands, job resources, and well-being. *Journal of Occupational Health Psychology*, *18*(2), 230–40. doi:10.1037/a0032141

Tims, M., Bakker, A. B., & Derks, D. (2015). Examining Job Crafting from an Interpersonal Perspective: Is Employee Job Crafting Related to the Well-Being of Colleagues? *Applied Psychology*, Advance online publication. doi:10.1111/apps.12043

Voydanoff, P. (2004). The Effects of Work Demands and Resources on Work-to-Family Conflict and Facilitation. *Journal of Marriage and Family*, *66*(2), 398–412. doi:10.1111/j.1741-3737.2004.00028.x

Williams, R. H., Zimmermann, D. W., & Mazzagatti, R. D. (1987). Large sample estimates of the reliability of simple, residualized, and base-free gain scors. *Journal of Experimental Education*, *55*(2), 116–118. doi:10.1080/00220973.1987.10806443

Wrzesniewski, A., & Dutton, J. E. (2001). Crafting a job: Revisining employees as active crafters of their work. *Academy of Management Review*, *26*(2), 179–201. doi:10.5465/AMR.2001.4378011

Manuscript Paper 3

Work-Life Boundaries and Well-Being: Does Work-to-Life Integration Impair Well-Being through Lack of Recovery?

Ariane G. Wepfer[1], Tammy D. Allen[2], Rebecca Brauchli[1], Gregor J. Jenny[1], Georg F. Bauer[1]

[1] Ariane G. Wepfer, Rebecca Brauchli, Gregor J. Jenny, Georg F. Bauer

Epidemiology, Biostatistics, and Prevention Institute; Division Public and Organizational Health; University of Zurich; Zurich; Switzerland

[2] Tammy D. Allen

Department of Psychology; Industrial & Organizational Psychology; University of South Florida, Tampa ; FL, USA

Abstract

Purpose – Against the backdrop of increasingly blurred boundaries between work and nonwork, the purpose of this study was to investigate the implications of employees' work-to-life boundary enactment for well-being. Using border/boundary theory (Ashforth, Kreiner, & Fugate, 2000; Clark, 2000) and the effort-recovery model (Meijman & Mulder, 1998), we developed a research model that links work-to-life integration enactment to exhaustion and to impaired work-life balance via lack of recovery activities (Sonnentag, 2003).

Design/methodology/approach – The model was tested using structural equation modeling. Our sample consisted of N = 1,916 employees, recruited via an online panel service.

Results – Results supported our hypotheses. Employees who scored high on work-to-life integration enactment felt more exhausted and experienced less work-life balance. Both

effects were mediated by recovery activities.

Implications – Understanding of the well-being implications of boundary enactment and underlying mechanisms can help human resource professionals and practitioners to devise and implement organizational policies and interventions that enable employees to develop boundary management strategies that are sustainable in that they do not impair employees' well-being.

Originality/value – Our study contributes to the existing knowledge on boundary management by investigating the well-being implications of work-to-life boundary enactment and by suggesting and testing recovery as an underlying mechanism. In doing so, we link boundary enactment with existing theory of the work-life interface. Based on our review of existent research on boundary management and well-being we disentangle previous contradictory findings.

Keywords: boundary management, boundary enactment, recovery, well-being, exhaustion, work-life balance

Over the past two decades, the boundaries between work and non-work life have become increasingly blurred. Laptops, smart phones and other forms of mobile communication technology have changed the way we work. For many, work has become more flexible with regard to when and where it can be done (Kossek & Michel, 2010). At the same time, studies show that employees work more hours than they used to and that work has become more intense (Green & McIntosh, 2001; Kelliher & Anderson, 2009). These twin forces have resulted in the need to be "always on" (Park, Fritz, & Jex, 2011). Employees work late, they take work home and they check work related communications during their time off. Some welcome this flexibility because it gives them the freedom to integrate work and nonwork life in a way that suits their needs and lets them craft the work-life balance they

want. Others feel overwhelmed, overtaxed and exhausted due to expectations for constant availability (Derks, Duin, Tims, & Bakker, 2015). In the current study we raise the question of how blurred boundaries affect well-being.

The formulation of border theory and boundary theory (Ashforth, Kreiner & Fugate, 2000; Clark, 2000) has set the stage for research that focuses on individuals' strategies to reconcile work and nonwork life (Kreiner, Hollensbe, & Sheep, 2009). Work-life scholars have begun to address the question of how individuals manage the boundaries between the work and the nonwork domain and have found that boundary management strategies fall along a segmentation-integration continuum. Segmentation of work and non-work means that the work and non-work domains are kept separate with fixed and impermeable boundaries in between while integration means that the boundaries between work and non-work are flexible and permeable (Ashforth et al., 2000; Clark, 2000). Multiple boundary management constructs, built around the idea of a segmentation-integration continuum, have been developed out of border and boundary theory and research has begun to relate these constructs to existent work-family concepts as well as to personal level outcomes (for an overview see Allen, Cho, & Meier, 2014). Few studies have related integration/segmentation strategies to well-being outcomes and in the few that have, mixed results are reported (Edwards & Rothbard, 1999; Kreiner, 2006).

Against the backdrop of these findings and the ongoing public and scholarly debate on burnout, constant availability, telecommuting and the reconcilability of work and non-work life, it is important to understand how boundary management strategies relate to well-being. The current study seeks to investigate the well-being implications of boundary management strategies that either shield the nonwork domain from intrusions from the work domain or integrate the work domain into the nonwork domain. Using boundary/border theory and the effort-recovery model, we develop a model that links work-to-life boundary enactment to two aspects of general well-being, namely exhaustion and work-life balance.

Our model proposes that recovery activities mediate the link between work-to-life boundary enactment and well-being. Our research contributes to the existing literature in several ways. First, our review and discussion of existing research on boundary management and well-being shows that boundary management is associated both positively and negatively with well-being indicators. By distinguishing between work-related and general well-being indicators, we help to disentangle these contradictory findings. Integration seems to relate positively to work-related well-being and negatively to general well-being. Based on this distinction, we develop and test a model that suggests an underlying mechanism that links boundary management to general-well-being. We thereby contribute to the theoretical understanding of the link between boundary management and general well-being. Second, we theoretically link work-to-life boundary enactment to well-being by proposing recovery activities as an underlying mechanism. Many scholars have lamented a lack of theoretical integration in the work-family field (Grzywacz & Marks, 2000). By integrating boundary management with existing theory of the work-nonwork interface (Sonnentag, 2003), we contribute to more theoretical integration. Third, by linking boundary enactment to well-being, we raise the question of what is successful boundary management. Boundary management strategies that harm employee well-being are not sustainable. Knowledge on how and why boundary enactment relates to well-being can guide organizational policy and interventions targeted at employees' healthy boundary management.

Theoretical Background

Boundary Theory and Border Theory

Work-family scholars have taken a keen interest in boundary management in recent years (Allen et al., 2014). Nippert-Eng's (1996) seminal scholarship on boundary work and the articulation of border theory by Clark (2000) and boundary theory by Ashforth, Kreiner, and Fugate (2000) have spurred a host of qualitative and quantitative research.

Boundary theory (Ashforth et al., 2000) and border theory (Clark, 2000) both conceptualize the work-nonwork interface in terms of boundaries/borders that surround the different life domains. Individuals create, maintain and transition across these boundaries/borders in an attempt to balance the demands of the work and nonwork domains (Clark, 2000). The strategies that individuals use to manage their work-nonwork boundaries fall along a segmentation-integration continuum (Allen, Cho, & Meier, 2014; Bulger, Matthews, & Hoffman, 2007). A segmentation strategy is characterized by inflexible and impermeable boundaries that do not allow for activities, objects, persons, thoughts and feelings of one domain to enter the other domain. Individuals who segment work from nonwork would not, for example, respond to work related calls or to emails after hours. At the other end of the continuum, an integration strategy is characterized by flexible and permeable boundaries that allow for activities, objects, persons, thoughts and feelings of one domain to enter the other domain. Individuals who integrate nonwork into work might, for example, bring friends and family members to their workplace. The boundary management approach adds to the existing work-nonwork literature by focusing on individual-level strategies to reconcile the work and nonwork domains. Individual level strategies are a relatively under researched area when compared to family and organizational level determinants of work-life interaction (Kreiner, Hollensbe, & Sheep, 2009). But in today's fast changing, highly flexible work environments, individuals' strategies for reconciling work and nonwork life are of growing importance (Kossek, Baltes, & Matthews, 2011).

Boundary Management: Segmentation and Integration

So far, boundary management research has focused primarily on segmentation vs. integration of the work and nonwork domains. Empirical research has shown that directionality matters (Hecht & Allen, 2009). Studies have found that individuals who integrate work into nonwork do not necessarily integrate nonwork into work and vice versa. Therefore, few people can be categorized as either a "segmenter" or an "integrator"

(Ammons, 2013; Bulger et al., 2007; Kossek, Ruderman, Braddy, & Hannum, 2012). This suggests that the two boundaries around work and nonwork are conceptually distinct (Matthews & Barnes-Farrell, 2010). Segmentation and integration have been discussed in terms of personal preference, actual boundary enactment or in terms of environmental conditions that encourage or enable one or the other (e.g., boundary supplies). Nippert-Eng (1996) distinguished between "desired and actual" boundaries. Kreiner (2006) for example investigated boundary "preferences and supplies." Following a person-environment fit approach, he investigated the interactive effects on workplace outcomes of personal preference for work-to-home integration or segmentation and the degree to which the workplace promotes integration or segmentation (boundary supplies). In his study, preference and supplies correlated at $r = .25$. Ammons (2013) argued for a boundary-fit approach, and examined the alignment of boundary preferences and boundary enactment, "the actual demarcations that individuals create or have between core life domains" (pp. 50). Powell and Greenhaus (2010), found that "preferred and actual segmentation of work from family" were only moderately associated $r = .31$.

In their recent review article, Allen et al. (2014) proposed a boundary management map that builds on the idea of a segmentation-integration continuum and that distinguishes between boundary preferences and boundary enactment. *Boundary preference* refers to the desired degree of segmentation or integration (Ammons, 2013; Kreiner, 2006). *Boundary enactment* refers to an individual's actual degree of segmentation or integration, which he or she established in order to fulfill work and non-work roles (Allen et al., 2014). That is, boundary enactment is the degree of integration or segmentation individuals establish in their lives in order to reconcile work and nonwork role demands, taking their personal preferences and environmental conditions into account. In the remainder of the article, we use the term boundary enactment when we discuss the concept on a general level and we use segmentation or integration enactment when we discuss the relation of boundary enactment with other

constructs to indicate the directionality of the relation. Allen et al. (2014) suggested that both boundary preferences and enactment are concerned with physical, psychological and behavioral aspects of boundaries between work and nonwork life. *Physical* aspects of boundaries are concerned with the place where tasks belonging to one domain are performed, (e.g. working at home vs. making a private phone call at work), and with the timing of tasks belonging to one domain (e.g. staying late to finish a job vs. leaving work early to attend to family needs). *Psychological* aspects of boundaries are concerned with the contingency of cognitive content (thoughts and emotions) and current domain involvement (e.g. pondering work problems while spending time with family vs. thinking about family problems while at work). Finally, *behavioral* aspects of boundaries are concerned with the contingency of social behavioral patterns and current domain involvement (e.g. bringing ones professional identity into nonwork life vs. bringing ones private identity into the workplace). In addition, the authors argued that boundary preferences and enactment can differ according to direction (work-to-nonwork and nonwork-to-work) (Allen et al., 2014).

Some scholars have focused on the characteristics of boundaries such as boundary permeability and flexibility in order to understand work-nonwork dynamics (Bulger et al., 2007; Clark, 2002; Matthews & Barnes-Farrell, 2010; Matthews, Barnes-Farrell, & Bulger, 2010). Matthews and Barnes-Farrell (2010) distinguish between flexibility-ability, the evaluation of one's control over timing and location of domain relevant behavior, and flexibility-willingness, which is concerned with the willingness to flex domain boundaries in order to attend to needs arising from the other domain. They further investigated boundary permeability, which they describe as "the degree to which an individual allows elements from one domain to enter the other domain" (Matthews & Barnes-Farrell, 2010, pp. 331). While their flexibility measures focus on control and willingness to flex domain boundaries, they do not assess the actual degree to which individuals flex domain boundaries. Their permeability measure assesses the actual degree of permeability. Moreover, it does not include the element

of control or intentionality (neither on item level nor in the instruction for participants) that their conceptualization suggests. Our approach to boundary management differs from this line of research in that boundary enactment captures the extent of segmentation/integration individuals establish on a global level, encompassing aspects of flexibility and permeability. Our research focuses on boundary management as an individual-level work-nonwork strategy and less on the more granular level of boundary characteristics. In their boundary-management map, Allen et al.(2014) integrated flexibility-availability/supplies as a condition for volitionally aligning one's enacted with one's preferred boundary management strategy.

Boundary Management and Well-Being

Both boundary and border theory argue that individuals are motivated to balance work and nonwork life by creating and maintaining boundaries around both domains (Ashforth et al., 2000; Clark, 2000). Theoretically, balance can be achieved through segmentation or through integration; boundary and border theory do not posit an advantage of one strategy over the other (Ashforth et al., 2000; S. C. Clark, 2000). For example, separation can foster balance when both domains provide for essential but very different needs (e.g., the work domain might meet an individual's need for competence, and the nonwork domain might meet the need for relatedness) while integration can foster balance by reducing the cost of role transitions (Ashforth et al., 2000).

In line with this theoretical position, empirical research shows that both strategies are associated with positive and negative outcomes (for an review see Allen et al., 2014). In general, integration is associated with more work-family conflict but also with more work-family enrichment (e.g. Chen, Powell, & Greenhaus, 2009; Powell & Greenhaus, 2010). Existent research on boundary management and well-being suggests that integration is associated with impaired *general well-being* such as anxiety, depression, etc. and with enhanced *work related well-being* such as job satisfaction and work engagement.

General well-being. Edwards and Rothbard (1999) found segmentation supplies (organization level factors that support segmentation or integration) to be associated with lower anxiety, depression, irritation, and somatic symptoms. Furthermore they found that having and preferring more segmentation was more beneficial for well-being than having and preferring low segmentation between work and nonwork life. Kreiner (2006) found that participants whose preference and supplies of segmentation were in the mid-range reported the lowest levels of stress.

Work-related well-being. Edwards and Rothbard (1999) found segmentation supplies to be associated with less work satisfaction. Kreiner (2006) found that job satisfaction was highest for participants who did not have and did not prefer segmentation between work and nonwork life. A study by Kossek, Ruderman, Braddy, and Hannum (2012) found that higher numbers of work-to-nonwork interruption behaviors (integration) were associated with higher work engagement. In a study on work-family boundary tactics, Carlson, Ferguson, Kacmar and Crawford (2013) found a positive effect of physical and temporal work-to-family and family-to-work integration tactics on work and family engagement respectively.

Taken together, these previous results suggest that segmentation and integration strategies are not inherently good or bad but depend on the outcomes considered. However, the convergence of results from studies using a multitude of boundary concepts related to segmentation/integration suggests that integration is associated with impaired general well-being and positive work-related well-being. To our knowledge, no prior study has investigated the link between boundary enactment and work-related and general well-being, but it seems reasonable to assume a similar pattern of results.

Model Development and Hypotheses

Boundary Enactment and General Well-being

The current study investigates the link between boundary enactment and well-being. We focus on the work-to-life direction because it has been shown that the work domain has a

stronger tendency to encroach on the nonwork domain than vice versa (Frone, 2003). Consequently, we propose a model that links work-to-life boundary enactment to general well-being via recovery activities. *Figure 1* shows our research model and the suggested associations.

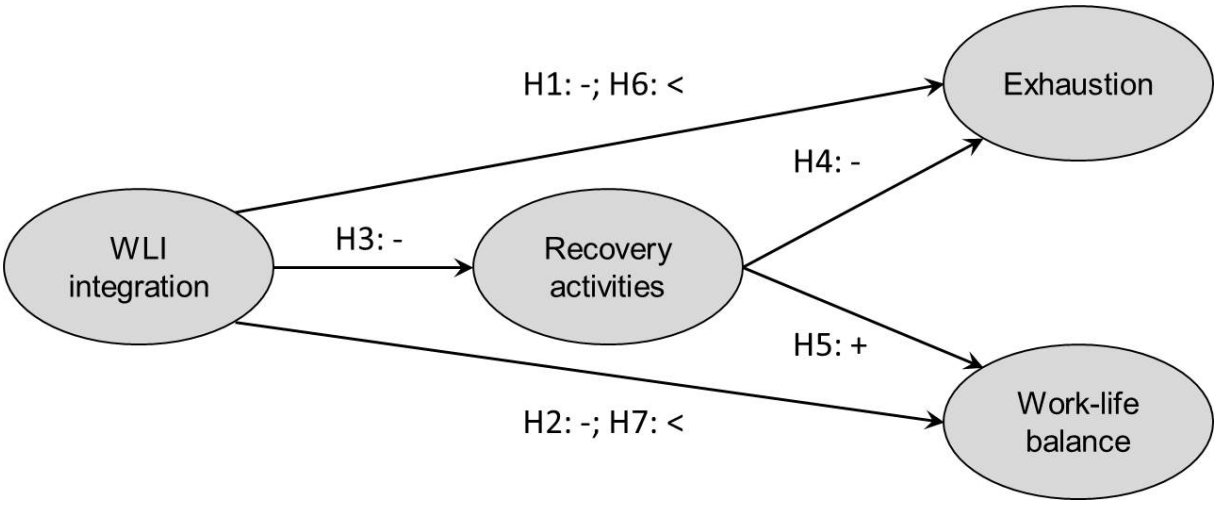

Figure 1. Research Model; WLI integration = work-to-life integration enactment; - negative relationship; + positive relationship; < = H6 & H7 postulate full or partial mediation of the effect of WLI integration on exhaustion and work-life balance via recovery activities respectively

General well-being has been conceptualized as consisting of *affective* and *cognitive* evaluations of people's lives (Diener, 2000). In this study, exhaustion was chosen as an indicator of affective well-being and work-life balance as a cognitive indicator of well-being. Work-life balance has often been equated with low work-life conflict and high work-life enrichment (Frone, 2003). In recent years though, researchers have begun to view work-life balance as a unique construct and studies have shown that it is indeed distinct from other work-life constructs such as work-life conflict and enrichment (Allen, 2013; Carlson, Grzywacz, & Zivnuska, 2009; Greenhaus & Allen, 2011). Unlike work-life conflict and enrichment, work-life balance is not about the causal influence of one domain or role on the other (Allen, 2013), but captures the reconcilability of the work and the nonwork domains and

can be described as "an overall interrole assessment of compatibility between work and family roles" (Allen, 2013; p. 703). Greenhaus and Allen (2011) conceptualized work-life balance as an assessment of satisfaction with and effectiveness in different life roles in accordance with one's life values. As such, work-life balance is one indicator of satisfaction with life and therefore captures an aspect of cognitive well-being.

Evidence from studies on boundary management and work-life balance suggests that integration is associated with less work-life balance. Li, Miao, Zhao, and Lehto (2013) found that innkeepers with high work-life integration levels also reported low levels of work-life balance. A study on boundary preferences and boundary control found that male employees of a Swedish telecom company with high segmentation preference and high boundary control reported good work-life balance (Mellner, Aronsson, & Kecklund, 2015).

In line with these previous empirical findings, we hypothesize that work-to-life integration enactment (WLI enactment) relates to impaired general well-being. We therefore expect that WLI enactment is positively associated with exhaustion and negatively associated with work-life balance.

H1: Work-to-life integration enactment is positively associated with exhaustion.

H2 Work-to-life integration enactment is negatively associated with impaired work-life balance.

Boundary Enactment, Recovery Activities and Well-being

We posit that recovery activities are an important process via which boundary enactment relates to well-being outcomes. The effort-recovery model (Meijman & Mulder, 1998) suggests that resources used at work need to be replenished during time away from work in order to prevent an ongoing deterioration of performance and well-being (Sonnentag, 2003). Research has shown that strain reactions, due to energy expenditure at work, can be reversed by recovery and unwinding during leisure time (Sonnentag, 2003). Sonnentag and Fritz (2007) have argued that for recovery to occur, individuals must be physically and

mentally away from work. By completely disengaging from work and work related tasks, the functional systems that have been taxed during work can return to their pre-stressor level (Meijman & Mulder, 1998). Building on COR-theory (Hobfoll, 1989, 2001), Sonnentag and Fritz (2007) further argue, that individuals are not only motivated to restore lost resources but also to gain new ones, both of which can be achieved by recovery experiences.

We argue that work-to-life integration enactment leaves less (continuous) time and opportunity for recovery activities. Uninterrupted recovery activities are important though, in order to disengage physically and mentally from work (Geurts et al., 2005; Meijman & Mulder, 1998). A lack of opportunities to disengage from work during recovery activities has negative well-being implications. Lost resources cannot be replenished nor can new resources be acquired. This in turn will lead to strain reactions. To our knowledge, there is no prior research on boundary *enactment* and recovery. However, two studies have related boundary *preferences* to recovery, finding that segmentation preferences is associated with detachment (Hahn & Dormann, 2013; Park, Fritz, & Jex, 2011). In addition, the results of a daily diary study on smart phone use (what could be considered as a specific form of integration enactment) indicated that when confronted with high levels of work-home interference, smart phone users were less successful at engaging in recovery activities than were non-users (Derks, ten Brummelhuis, Zecic, & Bakker, 2014). Taken together, these studies suggest that segmentation is associated with recovery activities and detachment. Based on existing theory and the research described, we hypothesize that work-to-life integration enactment leaves less opportunity to engage in recovery activities.

H3: Work-to-life integration enactment is negatively associated with recovery activities.

According to theory, insufficient recovery in turn will lead to strain reactions and impaired well-being, because lost resources cannot be replenished (Meijman & Mulder, 1998; Sonnentag & Fritz, 2007). The link between recovery and well-being has been extensively

researched. For an excellent review of the relevant literature see Sonnentag and Fritz (2014). Based on theory and empirical findings, we hypothesize that insufficient recovery activities relate to exhaustion and impaired work-life balance.

H4: Recovery activities are negatively associated with exhaustion.

H5: Recovery activities are positively associated with work-life balance.

Finally, we hypothesize that work-to-life integration enactment's negative relationship with well-being is explained by its association with recovery activities. One previous study lends support to this assumption. Barber and Jenkins (2014) found that work-to-home boundary crossing using ICTs (information and communication technology) had a negative indirect effect on sleep quality via lack of psychological detachment. However this effect only occurred for employees with low boundaries around ICT use. While this study only investigated work-to-life integration enactment in the form of ICT use, our study uses a broader conceptualization of integration enactment.

H6: Work-to-life integration enactment has an indirect effect on exhaustion via recovery activities.

H7: Work-to-life integration enactment has an indirect effect on work-life balance via recovery activities.

Method

Participants and Procedure

The sample consisted of 1,916 employees. Participants came from German-speaking countries, 51.6% of the final sample lived in Germany, 16.9% in Switzerland, 31.4% in Austria and 0.2% in an unspecified "other country." A total of 55.8% of the study population was male and the average age was 42.31 years (*SD* = 10.95). With regard to work hours, 12.2% worked 20 to 29 hours per week, 37.7% 30 to 39 hours and 50.1% worked 40 hours or more. A supervisory position was held by 25.1% and another 6.2% belonged to the top management of their organization. On average, participants had worked 10.7 years (*SD* =

10.01) for their organization. Most were married or in a relationship (70.3%) and 34.7% had children who lived at home. Participants were employed in a broad range of economic sectors and occupations: 11.7% worked in the health and social sector, 11% in the public administration / defense / social security sector, 10.2% in trading, 7.8% in the production of goods, 6.3% in information / communication, 6.6% in finance / insurances, 6.5% in technology / science, and 6.1% in education. The remaining participants were employed in other sectors, such as the real estate market, the hotel and restaurant industry, and the transport and construction industry. *Table 1* compares the study population to the general workforce of Austria, Germany and Switzerland in terms of gender and age composition, education and occupational sector. For the most part the study sample is representative. Employees from the production and trading sector are somewhat underrepresented while the public/defense/social security sector is somewhat overrepresented.

Data came from a cross-sectional online survey study on work and personal characteristics and employee health and well-being. Self-report methodology was deemed appropriate because all study constructs represent individual behaviors and subjective appraisals (Spector, 1994). Participants were contacted via the ISO-certified panel provider Respondi. Respondi provides a minimal incentive for participation (points, which can be redeemed towards a given service after participation in several surveys). For completion of a survey that takes about ten minutes, Respondi assigns 50 points which equals 50 Euro cents. The completion of our Survey took approximately 20 minutes. Participants were told that this was a study on work and personal characteristics and employee health and well-being. Altogether, 2,571 people clicked on the link of which 2,032 filled in the questionnaire. We excluded 116 participants from further analysis because they took less than three seconds per item, which we considered highly implausible, given our pretests of the questionnaire. This left us with a sample of N = 1,916. Participation was voluntary and the anonymity and

confidentiality of participation was stressed. Employees had to be between 18 and 65 years old and work at least 20 hours per week to be eligible for study participation.

Table 1. Comparison of study sample with the working population of Austria, Germany and Switzerland

Variable	Present study	A [a]	D [b]	CH [c]
% males	55.8	53.8	53.5	53.7
Mean age	42.3	40.4	42.7	41.1
Mean organisational tenure (years)	10.7	9.6	10.8	-
Education: % apprenticeship	42.1	38.1	53.5	33.4
Education: % higher education degree	32.2	35.3	29.3	38.1
Sector: % health and social	11.7	10.3	11.4	13.8
Sector: % public / defence / social security	11	7.7	7.4	5.1
Sector: % trading	10.2	15.1	13.1	12.7
Sector: % production of goods	7.8	17.3	18.8	14.3
Sector: % information / communication	6.3	2.9	3.6	3.6
Sector: % finance/insurances	6.6	3.6	3.2	5.7
Sector: % technology / science	6.5	4.8	5.8	8.5
Sector: % education	6.1	7.6	5.5	7.8

Note. A = Austria; D = Germany; CH = Switzerland; - = information not available

[a] Statistik Austria (Mikrozensus 2014)

[b] Statistisches Bundesamt (Mikrozensus 2013)

[c] Statistik Schweiz (SAKE 2014)

Measures

Work-life boundary enactment scale. To date, there is no established measure of boundary enactment (Allen et al., 2014). Thus, following the call by Allen and colleagues for

such a measure, we developed items that covered physical, psychological and behavioral aspects of boundary enactment for both directions (work-to-life & life-to-work). Although the focus of the present study is on work-to-life boundary enactment, we control for possible effects of life-to-work boundary enactment and thus developed a measure that captured both directions. Item content was based on qualitative studies on boundary management (Ammons, 2013; Kreiner et al., 2009; Nippert-Eng, 1996) and on existent scales that were developed to measure similar constructs (Hecht & Allen, 2009; Kossek & Lautsch, 2012). Every item consisted of two polar statements, one representing the segmentation end of the continuum and the other representing the integration end of the continuum. In accordance with our definition of boundary enactment as the degree of segmentation/integration individuals establish to meet the demands of the work and nonwork domains, we instructed participants to indicate how they "currently manage the boundaries between work and non-work life." They were asked to describe their own behavior on a 7-point Likert-scale between the polar statements of each item (see appendix for full scale and instructions). Two sample items for the work-to-life direction are: "I always leave my workplace on time – I often leave my workplace late" and "I never take work home – I often take work home." Two sample items for the life-to-work direction are: "I never take care of nonwork matters while physically at my workplace – I often take care of nonwork matters while physically at my workplace." and "I never communicate with friends and family while I am at work – I often communicate with friends and family while I am at work."

For scale validation, we randomly split our sample in two subsamples by assigning a random number between 0 and 1 to each participant using the random number function in Microsoft Excel. We then grouped participants with random numbers between 0 and 0.5 and participants with random numbers between 0.5 and 1 together. Based on the findings of earlier studies (Hecht & Allen, 2009), we expected to find two relatively uncorrelated factors, one for work-to-life boundary enactment and one for life-to-work boundary enactment. We

first conducted principal component analysis with Varimax rotation on the first subsample n_1 = 927. An initial 4-factor model was extracted. The four components explained 23.68%, 20.19%, 11.43% and 7.25% of variance respectively. This solution was not interpretable. Specifically, several items showed cross-loadings and two components had items from the work-to-life and the life-to-work dimension loading on them. Upon examining the Scree plot and the variance explained by each component, we decided for a more parsimonious two component solution. The first two components explained more than 20% of variance each while the amount of variance explained by components three and four dropped dramatically (11.43% & 7.25%). Based on this observation, together with our evaluation of the Scree plot, we decided that a two factor solution would be appropriate. In the two factor solution, items 1 to 7 loaded on the first component making up the work-to-life boundary enactment dimension, and items 8 to 16 loaded on the second component, the life-to-work boundary enactment dimension. There were no cross-loadings. Items 8 and 16, however, had to be excluded from further analysis due to unsatisfactory factor loadings (below 0.4). We then went on to cross-validate the scale on the second subsample n_2 = 989 using confirmatory factor analysis. The initial model, with items 1 to 7 loading onto the work-to-life boundary enactment latent variable and items 9 to 15 loading onto the life-to-work boundary enactment variable showed unsatisfactory model fit (X^2 = 892.50, *df* = 76, p = .00, X^2/df = 11.74; NFI = .85; TLI = .83; CFI = .86; RMSEA = .10, *p* = .00, CI = .10 to .11) (Hu & Bentler, 1999; Schermelleh-Engel, Moosbrugger, & Müller, 2003). Because the factor loadings of items 7, 10 and 15 were below 0.4 (.37, .37 and .29 respectively), we excluded them from the model. The fit of the resulting model was better but not optimal (X^2 = 395.43, *df* = 43, p = .00, X^2/df = 9.20; NFI = .92; TLI = .91; CFI = .93; RMSEA = .09, *p* = .00, CI = .08 - .10). Further inspection of the model revealed that the items 1 and 2 were highly correlated (*r* = .78) and that their error terms correlated at *r* = .52. A look at the wording revealed that the two items read rather similarly and participants might have had difficulties in keeping them apart (see

the complete scale in the appendix). We therefore decided to exclude item 1. This final model showed satisfactory fit (X^2 = 201.96, *df* = 34, p = .00, X^2/df = 5.94; NFI = .95; TLI = .94; CFI = .96; RMSEA = .07, *p* = .00, CI = .06 - .08) (Hu & Bentler, 1999; Schermelleh-Engel et al., 2003). Items 2 to 6 were included in the final work-to-life scale and items 9, 11, 12, 13 and 14 in the final life-to-work boundary enactment scale. It is of note that the two dimensions were uncorrelated (*r* = -.04, *p* = .29).

Recovery activities. Recovery activities were measured with the recovery management subscale of the work-life crafting scale (Peeters, Demerouti, & van Steenbergen, 2014). The original scale is in Dutch and we obtained a German translation from a professional translation service. The subscale consists of three items: "I make sure that I can relax during my time off (e.g., me-time, hobbies, sports)", "I make sure that I do things that I enjoy during my time off (e.g., social activities, sports)," "I take care that the amount of work time and private time are balanced." Participants answered on a 5-point Likert-scale with the following response categories, 1 (*never*), 2 (*rarely*), 3 (*sometimes*), 4 (*often*) and 5 (*always*). Due to conceptual overlap of the third item with work-life balance, we only used the first two items. Item scores were averaged to obtain a scale value.

Exhaustion. Exhaustion was measured with the German version of the burnout subscale from the second edition of the Copenhagen Psychosocial Questionnaire (COPSOQ), which asks participants about feelings of exhaustion during the past four weeks (Pejtersen, Kristensen, Borg, & Bjorner, 2010; German version: Nübling, Stössel, & Michaelis, 2010). The items read, "How often have you felt worn out?", "How often have you been physically exhausted?", "How often have you been emotionally exhausted?" and "How often have you felt tired?" The response categories were 1 (*never*), 2 (*rarely*), 3 (*sometimes*), 4 (*often*) and 5 (*always*). We computed mean scores to obtain scale values.

Work-life balance. Work-life balance was measured using the 5-item work-family balance scale (Allen & Kiburz, 2012; Greenhaus et al., 2012). The items were translated to

German by the first author and then back translated to English by a native speaker of English. The word family was exchanged for non-work life to make the scale applicable for a broader range of participants and to account for cultural and language differences. A sample item is, "I am satisfied with the balance I have achieved between my work life and my nonwork life." Participants are asked to indicate how much they agree with the items on a 5-point Likert scale that ranged from 1 (*strongly disagree*) to 5 (*strongly agree*). Item scores were averaged.

Control variables. Based on previous work-family research we considered gender, age, hours worked per week and job status as demographic control variables (e.g. Allen & Finkelstein, 2014; Moen, 2011; Powell & Greenhaus, 2010b; Schieman, Glavin, & Milkie, 2009). Male was coded as 0 and female as 1. Participants were asked to indicate their *age*. They had to be between 18 and 65 years old in order to be eligible for study participation. They were asked how many *hours* they work per week according to their contract. Response categories were "20 to 29 hours", "30 to 39 hours", "40 to 44 hours" and "more than 44 hours." Participants who worked less than 20 hours were not eligible for study participation. To assess job status, participants were asked if they belonged to the *top management* (4), held a *supervisory position* (3), were *employees without supervisory function* (2) or were *a trainee / an intern* (1). We also included the life-to-work integration enactment dimension of our boundary enactment scale as a control variable to account for possible well-being enhancing effects of this strategy.

Analyses

In order to test our model, we employed structural equation modeling using the AMOS 21 software package by IBM. We included life-to-work integration, sex, age, work hours per week and job status as control variables. Furthermore, we calculated 95% bias-corrected confidence intervals based on 5,000 bootstrap samples to assess the indirect and total effects (Cheung & Lau, 2007).

Results

Table 2 presents the means, standard deviations, alphas and correlations among study variables. Note that WLI enactment significantly correlates with exhaustion (r = .23) and work-life balance (r = -.35), lending initial support to Hypotheses 1 and 2.

To assess the distinctiveness of our study variables, we conducted a CFA for the four variables in our model (WLI enactment, recovery activities, exhaustion and work-life balance) and compared this model to a one-factor model. The four-factor measurement model (X^2 = 652.13, df = 98, p < .001, X^2/df = 6.70, NFI = .97, TLI = .97, CFI = .97, RMSEA = .05, p = .035 , CI = .05 to .06) fit the data better than did the one-factor model (X^2 = 7094.63, df = 104, p < .001, X^2/df = 68.22, NFI = .63, TLI = .58, CFI = .64, RMSEA = .19, p < .001, CI = .18 to .19) according to the chi-square difference test (ΔX^2 = 6442.50, df = 6, p < .001). Furthermore, each item loaded significantly (p < .001) on the appropriate latent construct. We therefore conclude that the four-factor model adequately represents our data and that our study variables are distinct constructs.

Table 2. Correlations and descriptives of study variables (N = 1,916)

	1	2	3	4	5
Study variables					
1 Work-to-life integration enactment	(.80)				
2 Life-to-work integration enactment	-.00	(.81)			
3 Recovery activities	-.32***	.06**	(.84)		
4 Exhaustion	.23***	-.02	-.42***	(.89)	
5 Work-life balance	-.35***	.06**	.57***	-.53***	(.90)
Means	3.34	3.76	3.68	3.47	3.02
Standard Deviations	1.32	1.19	.89	.89	.84
Demographics					
Sex	.01	-.13***	.03	.14***	-.02
Age	-.03	-.18***	-.00	-.12***	-.06**
Hours worked per week	.10***	.07**	-.07**	-.00	-.08***
Job status	.17***	.01	-.03	-.05*	-.02

Note: * = p < .05, ** = p < .01, *** = p < .001; Sex is coded as 0 = male and 1 = female

We next added paths and tested our structural model (see Figure 2). Model fit was satisfactory ($X^2 = 858.50$, $df = 99$, $p < .001$, $X^2/df = 8.67$; NFI = .96; TLI = .95; CFI = .96; RMSEA = .06, $p < .001$, CI = .06 to .07). In contrast to Hypothesis 1, which stated that WLI enactment was positively associated with exhaustion, the path from WLI enactment to exhaustion was not significant ($\beta = .04$, $p = .13$). Hypothesis 2 predicted that higher levels of WLI enactment would be associated with less work-life balance and our findings supported this claim. The path between WLI enactment and work-life balance was negative and significant ($\beta = -.11$, $p < .001$). In accordance with Hypothesis 3, which predicated a negative association between work-to-life integration enactment and recovery activities, WLI enactment was negatively associated with recovery activities ($\beta = -.36$, $p < .001$). Recovery activities in turn were negatively associated with exhaustion ($\beta = -.52$, $p < .001$), lending support to Hypothesis 4, which stated that more recovery activities would be associated with less exhaustion. Hypothesis 5 predicted that more recovery activities would be associated with more work-life balance. Our results supported this assumption. The coefficient for the path between recovery activities and work-life balance was positive and significant ($\beta = .65$, $p < .001$).

To assess the indirect effects, we examined 95% bias-corrected confidence intervals based on 5000 bootstrap samples (Cheung & Lau, 2007). Hypothesis 6 predicted an indirect effect of WLI enactment on exhaustion via recovery activities. Our data supported this assumption (standardized coefficient = .19, $p < .001$, $CI_{95\%} = .15$ to .23). We also found evidence for an indirect effect of WLI enactment on work-life balance via recovery activities (standardized coefficient = -.23, $p < .001$, $CI_{95\%} = -.27$ to -.19), lending support to Hypothesis 7.

We next fitted a model that included the control variables to see if the results would hold. For every significant zero-order correlation between control and study variables, we

included a path in the model (compare Table 2). We further allowed correlations among control variables. The model fit was satisfactory ($X^2 = 1446.03$, $df = 256$, $p < .001$, $X^2/df = 5.65$; NFI = .94; TLI = .94; CFI = .95; RMSEA = .05, $p = .68$, CI = .05 to .05). All our previous findings held even when accounting for the effects of life-to-work integration enactment, sex, age, hours worked per week and job status. The path coefficients for our structural model, when accounting for control variables are given in squared brackets in *Figure 2*.

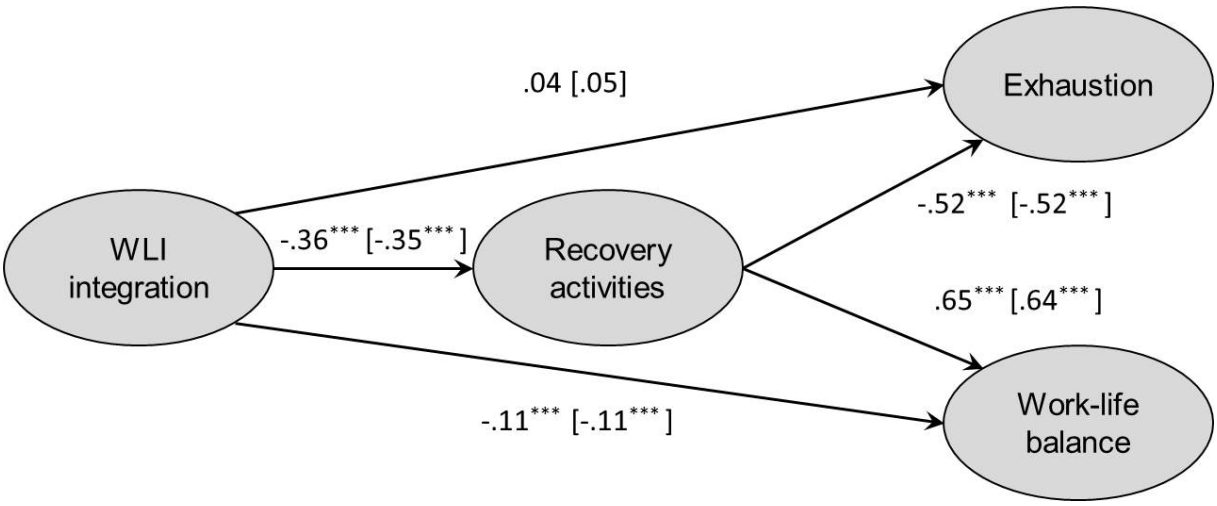

Figure 2. Results for structural model; WLI integration = work-to-life integration enactment; [] = path coefficients when accounting for control variables; *** $p < .001$

Discussion

In this study, we investigated relationships between work-to-life integration enactment and general well-being. A model was developed that links boundary enactment to affective and cognitive aspects of well-being via recovery activities. Our data confirmed our hypotheses. Employees with high WLI enactment reported being more exhausted and having less work-life balance. Employees who reported that they integrate work into nonwork life also pursued less recovery activities. Less recovery activities in turn were associated with more exhaustion and less work-life balance. As predicted, we found that WLI enactment had

an indirect effect on exhaustion via recovery activities, meaning that employees who integrate work more into their nonwork life reported being more exhausted because they recover less. This indirect effect rendered the direct effect of WLI enactment on exhaustion insignificant. WLI enactment also had an indirect effect on work-life balance via recovery activities in the sense that employees who integrate work more into their nonwork life reported less work-life balance because they recover less. The direct effect of WLI enactment on work-life balance was still significant when taking the indirect effect via recovery activities into account.

Our finding that WLI enactment is associated with impaired well-being is in line with previous research that has linked integration to general well-being indicators such as depression, somatic symptoms and stress (Edwards & Rothbard, 1999; Kreiner, 2006). Previous studies have found that the preference for integration strategies is associated with lack of recovery experiences (Hahn & Dormann, 2013; Park et al., 2011). Our study extends this evidence by taking it from the level of preferences to a behavioral level and showing that employees who actually integrate work into their nonwork life take less care to engage sufficiently in activities that provide recovery experiences. Furthermore, we were able to demonstrate that the lack of recovery activities explains the association between WLI enactment and general well-being.

Strengths, Limitations and Future Research

Due to our cross-sectional study design, causality cannot be established. In this study, we focused on one proposed causal direction underpinned with theoretical considerations. Now that the plausibility of these relationships has been demonstrated, further research is needed to replicate our findings with longitudinal data and to test for reciprocal effects.

Our study sample is diverse and representative of the general working population in Germany, Austria and Switzerland. Therefore, we feel reasonably confident that our data represents the relation of WLI enactment with well-being in the general working population of those countries. On the other hand, jobs and occupational groups differ by how much

flexibility can be granted to employees and therefore if and how much integration between work and nonwork life is possible. Future studies need to investigate if the associations we found differ by occupational groups and if there are moderators. For example schedule and workplace flexibility could moderate the associations of work-to-life integration enactment with general well-being. Furthermore, boundary preferences (Chen et al., 2009; Edwards & Rothbard, 1999; Kreiner, 2006) and boundary control (Kossek et al., 2012) could have a moderating influence on the association between WLI enactment and well-being. Some previous studies, which investigated the influence of congruence between boundary preferences and boundary enactment/supplies, have found evidence for a conducive effect of congruence on work-life and well-being variables (Chen et al., 2009; Edwards & Rothbard, 1999; Kreiner, 2006). Moreover, there is evidence that integration strategies are positively associated with work-life enrichment/positive spillover (McNall, Scott, & Nicklin, 2015; Powell & Greenhaus, 2010) and enrichment/positive spillover in turn are predictive of well-being (Crain & Hammer, 2013). Future research should therefore investigate if there is an indirect effect of boundary enactment on well-being via work-life enrichment/positive spillover.

Following Allen and colleagues' (2014) call for a more comprehensive work-life boundary enactment measure, we developed a new scale for this study, which was psychometrically sound, but only after we excluded all items that were designed to measure behavioral aspects of boundary enactment and two items designed to capture physical aspects. It is not clear if these exclusions were necessary due to the specific items we developed or if behavioral aspects of boundary enactment are simply uncorrelated to other aspects of boundary enactment and should therefore be considered separately. More work is needed to develop a more psychometrically robust measure of boundary enactment and to better understand the dimensionality of this construct. It is important to keep in mind that the well-

being impairing effect of WLI enactment we found in this study can thus far only be attributed to physical (local and temporal) and psychological aspects of boundary enactment.

In contrast to the brief general recovery management scale chosen for the current research, in future research, we recommend that recovery be measured with Sonnentag and Fritz's measure of recovery experiences that distinguishes between the experiences of psychological detachment, relaxation, mastery and control (Sonnentag & Fritz, 2007), or with Derks et al's (2014) adaptation of this scale which measures recovery activities aimed at detachment, relaxation, mastery and control. This would allow researchers to gain insights as to what is missing qualitatively in terms of recovery experiences for employees who integrate work into nonwork life.

We consider it a strength of our study that it shows the well-being impairing potential of WLI enactment for two such diverse well-being indicators as exhaustion and work-life balance, capturing affective and cognitive aspects of well-being. Future studies should include other indicators of general well-being such as life satisfaction and positive affectivity to see if our findings are specific to the well-being indicators we chose or if the effect holds across a variety of indicators, such as somatic symptoms, quality of sleep, positive and negative affectivity and life satisfaction. Given that previous studies found a positive association of integration strategies with work related well-being indicators such as job satisfaction and engagement, future research should try to incorporate these effects in a more comprehensive model that includes work and nonwork satisfaction/well-being indicators as predictors of general well-being (Michel, Mitchelson, Kotrba, LeBreton, & Baltes, 2009).

Returning to the question of directionality, it is conceivable that WLI enactment is a regulatory reaction to impaired well-being or to lack of recovery experiences. Employees who feel exhausted and out of balance might start to segment both domains to prevent a further decrease in well-being. A qualitative study by Ammons (2013) on boundary strategies over the course of nine months found evidence that boundary preferences and enactment can

change over time and that boundaries are a work in progress. Longitudinal data with several measurement points or diary data is needed to test the notion of boundary enactment as a regulatory reaction to strain. Lastly, future studies should address the role of working conditions in shaping people's boundary enactment. It is conceivable that high workloads and organizational climate variables (e.g., expectations for constant availability) influence employees' work-to-life boundary enactment.

Implications

In this study, we bring attention to the relationship between WLI enactment and general well-being. Our results suggest that integrating work into nonwork life relates to exhaustion and to impaired work-life balance. While previous studies have found evidence for a relation between work-life integration and impaired general well-being (Chen et al., 2009; Edwards & Rothbard, 1999; Kreiner, 2006), our study contributes to the existing knowledge by focusing on actual boundary enactment instead of boundary preferences and supplies and by suggesting and testing possible mechanisms behind this association.

The finding that recovery activities mediate the association of WLI enactment with impaired general well-being can be the starting point for developing interventions. For example, employees could be coached to integrate work into their nonwork life in such a way that leaves them with enough time to pursue recovery activities.

While previous studies approached boundary management from a person-environment fit perspective (Chen et al., 2009; Edwards & Rothbard, 1999; Kreiner, 2006), our approach to boundary management as an individual-level strategy emphasizes the aspect of personal agency. We believe that in today's increasingly flexible and changing work environment, individual-level strategies for reconciling work and nonwork life are becoming more important (Kossek et al., 2011; Kreiner et al., 2009). Our conceptualization of boundary enactment can help to understand how individuals manage the boundaries between work and nonwork life.

We also developed a new approach to measuring work-life boundary enactment. By developing polar items with segmentation and integration endpoints, we let participants directly rate their boundary enactment strategies on the segmentation-integration continuum instead of asking their agreement to items that either represent segmentation or integration behaviors. Future research can build on this approach and further develop and validate a comprehensive measure of work-life boundary enactment that takes physical, psychological and behavioral aspects of boundary enactment into account.

Finally, we would like to emphasize that we believe that greater flexibility in when and where work can be done thanks to telecommuting and mobile technology can be a double-edged sword. While it can grant people the freedom to craft the "work-life fit" (Moen, Kelly, & Huang, 2008; Moen, 2011) that suits their needs, it can also facilitate the encroachment of work onto the nonwork domain with negative consequences for employees' well-being as well as that of their families. Evidence suggests that the latter is often the case due to work being a "greedy institution" (Coser, 1974; Frone, 2003; Glavin & Schieman, 2011). Much work needs to be done in order to understand the conditions that enable employees to craft boundaries between work and nonwork life that are in line with their preferences and needs and do not impair their health and well-being.

Conclusion

The results of our study suggest that work-to-life boundary enactment has implications for employees' well-being. From an occupational health perspective, it is important to understand these implications, the mechanisms behind them and to identify determinants of work-life boundary enactment. Based on this knowledge, practitioners and policy makers can adjust organizational policy and culture and help employees manage their work-nonwork boundaries in a way that does not impair their well-being. We believe that by investigating the effect of work-life integration enactment on exhaustion and work-life balance and by identifying a mechanism behind this association, we add to the existing knowledge of

boundary dynamics and their impact on well-being. Future research should replicate and extend our results.

References

Allen, T. D. (2013). The work – family role interface: A synthesis of the research from industrial and organizational psychology. In N. W. Schmitt, S. I. Highhouse, & I. B. Weiner (Eds.), *Handbook of Psychology,* (2nd ed., pp. 698 – 718). Hoboken, NJ, USA: John Wiley & Sons Inc. doi:10.1002/9781118133880.hop212026

Allen, T. D., Cho, E., & Meier, L. L. (2014). Work–family boundary dynamics. *Annual Review of Organizational Psychology and Organizational Behavior*, *1*(1), 99–121. doi:10.1146/annurev-orgpsych-031413-091330

Allen, T. D., & Finkelstein, L. M. (2014). Work-family conflict among members of full-time dual-earner couples: An examination of family life stage, gender, and age. *Journal of Occupational Health Psychology*, *19*(3), 376–84. doi:10.1037/a0036941

Allen, T. D., & Kiburz, K. M. (2012). Trait mindfulness and work–family balance among working parents: The mediating effects of vitality and sleep quality. *Journal of Vocational Behavior*, *80*(2), 372–379. doi:10.1016/j.jvb.2011.09.002

Ammons, S. K. (2013). Work-family boundary strategies: Stability and alignment between preferred and enacted boundaries. *Journal of Vocational Behavior*, *82*(1), 49–58. doi:10.1016/j.jvb.2012.11.002

Ashforth, B. E., Kreiner, G. E., & Fugate, M. (2000). All in a day's work: Boundries and micro role transition. *Academy of Management Review*, *25*(3), 472–491. doi:10.5465/AMR.2000.3363315

Barber, L. K., & Jenkins, J. S. (2014). Creating technological boundaries to protect bedtime: Examining work-home boundary management, psychological detachment and sleep. *Stress and Health*, *30*(3), 259–264. doi:10.1002/smi.2536

Bulger, C. a, Matthews, R. a, & Hoffman, M. E. (2007). Work and personal life boundary management: boundary strength, work/personal life balance, and the segmentation-integration continuum. *Journal of Occupational Health Psychology*, *12*(4), 365–75.

doi:10.1037/1076-8998.12.4.365

Carlson, D. S., Grzywacz, J. G., & Zivnuska, S. (2009). Is work-family balance more than conflict and enrichment? *Human Relations; Studies towards the Integration of the Social Sciences*, *62*(10), 1459. doi:10.1177/0018726709336500

Chen, Z., Powell, G. N., & Greenhaus, J. H. (2009). Work-to-family conflict, positive spillover, and boundary management: a person-environment fit approach. *Journal of Vocational Behavior*, *74*(1), 82–93. doi:10.1016/j.jvb.2008.10.009

Cheung, G. W., & Lau, R. S. (2007). Testing mediation and suppression effects of latent variables: Bootstrapping with structural equation models. *Organizational Research Methods*, *11*(2), 296–325. doi:10.1177/1094428107300343

Clark, S. C. (2000). Work/family border theory: A new theory of work/family balance. *Human Relations*, *53*(6), 747–770. doi:10.1177/0018726700536001

Clark, S. C. (2002). Communicating across the work/home border. *Community, Work & Family*, *5*(1), 23–48. doi:10.1080/13668800020006802

Coser, L. A. (1974). *Greedy institutions: Patterns of undivided commitment*. New York: Free Press New York. doi:10.1163/_q3_SIM_00374

Crain, T. L., & Hammer, L. B. (2013). Work–family enrichment: A systematic review of antecedents, outcomes, and mechanisms. In *Advances in Positive Organizational Psychology* (Vol. 1, pp. 303–328). Emerald Group Publishing Limited. doi:10.1108/S2046-410X(2013)0000001016

Derks, D., Duin, D. Van, Tims, M., & Bakker, A. B. (2015). Smartphone use and work–home interference: The moderating role of social norms and employee work engagement. *Journal of Occupational and Organizational Psychology*, *88*, 155–177. doi:10.1111/joop.12083

Derks, D., ten Brummelhuis, L. L., Zecic, D., & Bakker, A. B. (2014). Switching on and off … : Does smartphone use obstruct the possibility to engage in recovery activities?

European Journal of Work and Organizational Psychology, *23*(1), 80 – 90. doi:10.1080/1359432X.2012.711013

Diener, E. (2000). Subjective well-being. The science of happiness and a proposal for a national index. *The American Psychologist*, *55*(1), 34–43. doi:10.1037/0003-066X.55.1.34

Edwards, J., & Rothbard, N. (1999). Work and family stress and well - being: An examination of person – environment fit in the work and family domains. *Organizational Behavior and Human Decision Processes*, *77*(2), 85–129.

Frone, M. R. (2003). Work–family balance. In J. C. Quick & L. E. Tetrick (Eds.), *Handbook of occupational health psychology,* (pp. 143–162). Washington, DC, USA: American Psychological Association.

Geurts, S. A. E., Taris, T. W., Kompier, M. A. J., Dikkers, J. S. E., Van Hooff, M. L. M., & Kinnunen, U. M. (2005). Work-home interaction from a work psychological perspective: Development and validation of a new questionnaire, the SWING. *Work & Stress*, *19*(4), 319–339. doi:10.1080/02678370500410208

Glavin, P., & Schieman, S. (2011). Work-family role blurring and work-family conflict: The moderating influence of job resources and job demands. *Work and Occupations*, *39*(1), 71–98. doi:10.1177/0730888411406295

Green, F., & McIntosh, S. (2001). The intensification of work in Europe. *Labour Economics*, *8*, 291–308.

Greenhaus, J., & Allen, T. (2011). Work-Family Balance: A review and extension of the literature. In J. Campbell Quick & L. E. Tetrick (Eds.), *Handbook of Occupational Health Psychology* (2nd ed., pp. 156 – 183). Washington, DC, USA: American Psychological Association.

Greenhaus, J. H., Ziegert, J. C., & Allen, T. D. (2012). When family-supportive supervision matters: Relations between multiple sources of support and work–family balance.

Journal of Vocational Behavior, *80*(2), 266–275. doi:10.1016/j.jvb.2011.10.008

Grzywacz, J. G., & Marks, N. F. (2000). Reconceptualizing the work-family interface: An ecological perspective on the correlates of positive and negative spillover between work and family. *Journal of Occupational Health Psychology*, *5*(1), 111–26.

Hahn, V. C., & Dormann, C. (2013). The role of partners and children for employees' psychological detachment from work and well-being. *The Journal of Applied Psychology*, *98*(1), 26–36. doi:10.1037/a0030650

Hecht, T. D., & Allen, N. J. (2009). A longitudinal examination of the work – nonwork boundary strength construct. *Journal of Organizational Behavior*, *30*(7), 839–862. doi:10.1002/job

Hobfoll, S. E. (1989). Conservation of resources: A new attempt at conceptualizing stress. *American Psychologist*, *44*(3), 513–524. doi:10.1037//0003-066X.44.3.513

Hobfoll, S. E. (2001). The influence of culture, community, and the nested-self in the stress process: Advancing conservation of resources theory. *Applied Psychology*, *50*(3), 337–421. doi:10.1111/1464-0597.00062

Hu, L., & Bentler, P. M. (1999). Cutoff criteria for fit indexes in covariance structure analysis: Conventional criteria versus new alternatives. *Structural Equation Modeling: A Multidisciplinary Journal*, *6*(1), 1–55. doi:10.1080/10705519909540118

Kelliher, C., & Anderson, D. (2009). Doing more with less? Flexible working practices and the intensification of work. *Human Relations*, *63*(1), 83–106. doi:10.1177/0018726709349199

Kossek, E. E., Baltes, B. B., & Matthews, R. a. (2011). How work-family research can finally have an impact in organizations. *Industrial and Organizational Psychology*, *4*(3), 352–369. doi:10.1111/j.1754-9434.2011.01353.x

Kossek, E. E., & Lautsch, B. A. (2012). Work-family boundary management styles in organizations: A cross-level model. *Organizational Psychology Review*, *2*(2), 152–171.

doi:10.1177/2041386611436264

Kossek, E. E., & Michel, J. S. (2010). Flexible work schedules. In S. Zedeck (Ed.), *APA Handbook of industrial and organizational psychology,* (Vol. 1, pp. 535 – 572). Washington, DC: American Psychological Association.

Kossek, E. E., Ruderman, M. N., Braddy, P. W., & Hannum, K. M. (2012). Work–nonwork boundary management profiles: A person-centered approach. *Journal of Vocational Behavior*, *81*(1), 112–128. doi:10.1016/j.jvb.2012.04.003

Kreiner, G. E. (2006). Consequences of work-home segmentation or integration: A person-environment fit perspective. *Journal of Organizational Behavior*, *27*(4), 485–507. doi:10.1002/job.386

Kreiner, G. E., Hollensbe, E. C., & Sheep, M. L. (2009). Balancing borders and bridges: Negotiating the work-home interface via boundary work tactics. *Academy of Management Journal*, *52*(4), 704–730. doi:10.5465/AMJ.2009.43669916

Li, Y., Miao, L., Zhao, X., & Lehto, X. (2013). When family rooms become guest lounges: Work–family balance of B&B innkeepers. *International Journal of Hospitality Management*, *34*, 138–149. doi:10.1016/j.ijhm.2013.03.002

Matthews, R. A, & Barnes-Farrell, J. L. (2010). Development and initial evaluation of an enhanced measure of boundary flexibility for the work and family domains. *Journal of Occupational Health Psychology*, *15*(3), 330–46. doi:10.1037/a0019302

Matthews, R. A., Barnes-Farrell, J. L., & Bulger, C. A. (2010). Advancing measurement of work and family domain boundary characteristics. *Journal of Vocational Behavior*, *77*(3), 447–460. doi:10.1016/j.jvb.2010.05.008

McNall, L. A., Scott, L. D., & Nicklin, J. M. (2015). Do positive affectivity and boundary preferences matter for work-family enrichment? A study of human service workers. *Journal of Occupational Health Psychology*, *20*(1), 93–104. doi:10.1037/a0038165

Meijman, T. F., & Mulder, G. (1998). Psychological aspects of workload. In P. J. D. Drenth

& H. Thierry (Eds.), *Handbook of work and organizational psychology, vol. 2: Work psychology* (pp. 5–33). Hove, UK: Psychology Press.

Mellner, C., Aronsson, G., & Kecklund, G. (2015). Boundary management preferences, boundary control, and work-life balance among full-time employed professionals in knowledge-intensive, flexible work. *Nordic Journal of Working Life Studies*, *4*(4), 7–23.

Michel, J. S., Mitchelson, J. K., Kotrba, L. M., LeBreton, J. M., & Baltes, B. B. (2009). A comparative test of work-family conflict models and critical examination of work-family linkages. *Journal of Vocational Behavior*, *74*(2), 199–218. doi:10.1016/j.jvb.2008.12.005

Moen, P. (2011). From "work–family" to the "gendered life course" and "fit": five challenges to the field. *Community, Work & Family*, *14*(1), 81–96. doi:10.1080/13668803.2010.532661

Moen, P., Kelly, E., & Huang, R. (2008). "Fit" inside the work-family black box: An ecology of the life course, cycles of control reframing. *Journal of Occupational and Organizational Psychology*, *81*(3), 411–433. doi:10.1348/096317908X315495

Nippert-Eng, C. (1996). Calendars and keys: The classification of "home" and "work." *Sociological Forum*, *11*(3), 563–583.

Nübling, M., Stössel, U., & Michaelis, M. (2010). Belastungen am Arbeitsplatz: Die deutsche Standardversion des COPSOQ (Copenhagen Psychosocial Questionnaire). In *Fehlzeiten-Report 2009* (pp. 253–261). Berlin Heidelberg: Springer.

Park, Y., Fritz, C., & Jex, S. M. (2011). Relationships between work-home segmentation and psychological detachment from work: the role of communication technology use at home. *Journal of Occupational Health Psychology*, *16*(4), 457–67. doi:10.1037/a0023594

Pejtersen, J. H., Kristensen, T. S., Borg, V., & Bjorner, J. B. (2010). The second version of the Copenhagen Psychosocial Questionnaire. *Scandinavian Journal of Public Health*,

38(3 Suppl), 8–24. doi:10.1177/1403494809349858

Powell, G. N., & Greenhaus, J. H. (2010). Sex, gender, and the work-to-family interface: Exploring negative and positive interdependencies. *Academy of Management Journal*, *53*(3), 513–534. doi:10.5465/AMJ.2010.51468647

Schermelleh-Engel, K., Moosbrugger, H., & Müller, H. (2003). Evaluating the fit of structural equation models: Tests of significance and descriptive goodness-of-fit measures. *Methods of Psychological Research Online, 8*(2), 23–74.

Schieman, S., Glavin, P., & Milkie, M. A. (2009). When work interferes with life: Work-nonwork interference and the influence of work-related demands and resources. *American Sociological Review*, *74*(6), 966–988. doi:10.1177/000312240907400606

Sonnentag, S. (2003). Recovery, work engagement, and proactive behavior: A new look at the interface between nonwork and work. *Journal of Applied Psychology*, *88*(3), 518–528. doi:10.1037/0021-9010.88.3.518

Sonnentag, S., & Fritz, C. (2007). The Recovery Experience Questionnaire: development and validation of a measure for assessing recuperation and unwinding from work. *Journal of Occupational Health Psychology*, *12*(3), 204–21. doi:10.1037/1076-8998.12.3.204

Sonnentag, S., & Fritz, C. (2014). Recovery from job stress: The stressor-detachment model as an integrative framework. *Journal of Organizational Behavior*, *36*(1), 72-103. doi:10.1002/job1924

Spector, P. E. (1994). Using self-report questionnaires in OB research: A comment on the use of a controversial method. *Journal of Organizational Behavior*, *15*(5), 385–392.

Appendix

The first four items of each direction, items 1 – 4 and 9 – 12, are concerned with physical aspects of boundaries - two for local aspects and two for temporal aspects. Items 5, 6 and 13, 14 are concerned with psychological boundaries and items 7 & 8 and 15 & 16 with behavioral aspects of boundaries.

Instructions

The following questions are concerned with how you currently manage the boundaries between work and nonwork life. The items below consist of two opposing statements. Please indicate for each item, what matches your own behavior. The closer to a statement you put your mark, the more this statement reflects your own behavior. There is no right or wrong.

	Please indicate where you place yourself between both ends of the scale.								
Work-to-life segmentation/integration									
01	I never work from home.	O_1	O_2	O_3	O_4	O_5	O_6	O_7	I often work from home.
02*	I never take work home.	O_1	O_2	O_3	O_4	O_5	O_6	O_7	I often take work home.
03*	I always leave my workplace on time.	O_1	O_2	O_3	O_4	O_5	O_6	O_7	I often leave my workplace late.
04*	I never work after hours or on weekends.	O_1	O_2	O_3	O_4	O_5	O_6	O_7	I often work after hours or on weekends.
05*	I never think about work matters during my time off.	O_1	O_2	O_3	O_4	O_5	O_6	O_7	I often think about work matters during my time off.
06*	I never communicate with people from work during my time off.	O_1	O_2	O_3	O_4	O_5	O_6	O_7	I often communicate with people from work during my time off.
07	I never talk about work with people from outside of work.	O_1	O_2	O_3	O_4	O_5	O_6	O_7	I often talk about work with people from outside of work.
08	Outside of work, I am a different person than I am at work.	O_1	O_2	O_3	O_4	O_5	O_6	O_7	Outside of work I am the same person as I am at work.
Life-to-work segmentation/integration									
09*	I never take care of nonwork matters while physically at my workplace.	O_1	O_2	O_3	O_4	O_5	O_6	O_7	I often take care of nonwork matters while physically at my workplace.
10	I have no personal items at my workplace.	O_1	O_2	O_3	O_4	O_5	O_6	O_7	I have many personal items at my workplace.
11*	I never get to work late or leave early, in order to take care of nonwork matters.	O_1	O_2	O_3	O_4	O_5	O_6	O_7	I often get to work late or leave early, in order to take care of nonwork matters.
12*	I never take care of nonwork matters during scheduled work hours.	O_1	O_2	O_3	O_4	O_5	O_6	O_7	I often take care of nonwork matters during scheduled work hours.

13*	I never think about nonwork issues while I'm at work.	O1	O2	O3	O4	O5	O6	O7	I often think about nonwork issues while I'm at work.
14*	I never communicate with family and friends while I am at work.	O1	O2	O3	O4	O5	O6	O7	I often communicate with family and friends while I am at work.
15	I never talk about my nonwork life at work.	O1	O2	O3	O4	O5	O6	O7	I talk a lot about my nonwork life at work.
16	At work I behave completely different than at home.	O1	O2	O3	O4	O5	O6	O7	At work I behave the same way as at home.

Notes: * denotes the items that were kept in the scale.

Curriculum Vitae

Lic. Phil. Ariane Wepfer

Person

Date of birth:	27.06.1985
E-Mail:	ariane.wepfer@gmail.com

Education

Since 10/2012	**Doctoral studies in occupational health psychology** at ETH Zürich Department of Management, Technology and Economics
02/2015 – 03/2015	**Visiting PhD student** University of South Florida, Tampa, USA Psychology department, lab of Prof. Dr. Tammy D. Allen
10/2005 – 03/2012	**Studies in Psychology (Lic. phil.)**, University of Zurich *Minor I:* Psychopathology *Minor II:* Social & Preventive medicine
08/2001 – 12/2004	**General qualification for university entrance** (Matura) Gymnasium Münchenstein, BL
08/2002 – 06/2003	**Highschool student exchange** with YFU Helsinki, Finland

Professional Experience

11/2015 – present	**Occupational health psychologist** Zurich Insurance Company Ltd.
10/2012 – 09/2015	**Research assistant** University of Zurich Epidemiology, Biostatistics and Prevention Institute Division Public and Organizational Health
08/2008 – 03/2012	**Research assistant** University of Zurich Department of Psychology, lab of Prof. Dr. Veronika Brandstätter-Morawietz
01/2011 – 02/2011	**Clinical psychology internship** Psychiatrische Klinik Königsfelden, Windisch

09/2010 – 12/2010	**Tutor** Course: Introduction to studying psychology University of Zurich
09/2009 – 12/2009	**Research internship** Stanford University, CA, USA Psychology department, lab of Prof. Carol S. Dweck
06/2008 – 07/2008	**Internship health promotion** Ostseeklinik Schönberg-Holm, Germany Psychological Service

Further Professional Experience

06/2012 – 08/2012	**Management assistant** Orell Füssli Security Printing Ltd Zürich
11/2006 – 08/2007	**Cashier** Coop Bau & Hobby Würenlingen

Conference Presentations and Publications

Huber, A., Wepfer, A. G., Jenny, G. J., Brauchli, R., & Bauer, G. F. (2013, August). *Arbeitsbelastungen und Ressourcen über die Lebensspanne*. Posterpräsentation an der Swiss Pulic Health Conference, Zürich.

Wepfer, A. G., Brauchli, R., Jenny, G. J., Hämmig, O., & Bauer, G. F. (2014, April). *The gendered life-course and work-life interaction: How part time work relates to variables of work-life interaction for men and women across family-life stages.* Paper presented at the European Academy of Occupational Health Psychology conference, London.

Wepfer, A. G., Brauchli, R., Jenny, G. J., Hämmig, O., & Bauer, G. F. (2014, Juni). *The Gendered Life-Course and Work-Life Interaction: How Part Time Work Relates to Variables of Work-Life Interaction for Men and Women across Family-Life Stages.* Paper presented at the Work & Family Research Network Conference, New York, NY.

Wepfer, A. G., Brauchli R., Jenny G. J., Bauer G. F. (2015, May). Does Work-Life Integration Impair Well-Being? The Mediating Role of Work-Family Conflict and Recovery for the Link between Boundary Enactment and Well-Being. Paper presented at the Work, Stress and Health Conference 2015, Atlanta, GA, USA.

Wepfer, A. G., Brauchli R., Jenny G. J., Hämmig O., Bauer G. F. (2015). The Experience of Work-Life Balance across Family-Life Stages in Switzerland: A Cross-sectional Questionnaire-based Study. *BMC public health*, *15*(1), 1.

Wepfer, A. G., Brauchli, R., Jenny, G. J., & Bauer, G. F. (under review). *Work-life boundaries and health & well-being: Does work-to-home integration impair health and well-being through increased work-to-life conflict and lack of recovery?*

Wepfer, A. G., Brauchli, R. Jenny, G, J., & Bauer, G. F. (under review). *Does Job crafting have a long term beneficial effect on well-being? A longitudinal study on job crafting, working conditions and well-being indicators.*