ETH zürich

ETH Library

Direct current technologies for Switzerland's electricity transmission and distribution

White Paper on DC technologies

Report

Author(s):
Carpita, Mauro; Dujic, Drazen; Christe, Alexandre; Milovanovic, Stefan; Utvic, Milan; Schultz, Tim; Franck, Christian; Razzaghi, Reza; Wang, Zhaoyang; Paolone, Mario; Rachidi, Farhad; Galland, Olga; Allani, Mohammed; Favre-Perrod, Patrick; Tsolaridis, Georgios; Biela, Jürgen

Publication date:
2019-03

Permanent link:
https://doi.org/10.3929/ethz-b-000347704

Rights / license:
In Copyright - Non-Commercial Use Permitted

This page was generated automatically upon download from the ETH Zurich Research Collection.
For more information, please consult the Terms of use.

SCCER – FURIES
Shaping the FUtuRe SwIss Electrical InfraStructure

Schweizerische Eidgenossenschaft
Confédération suisse
Confederazione Svizzera
Confederaziun svizra

Swiss Confederation

Innosuisse – Swiss Innovation Agency

Direct current technologies for Switzerland's electricity transmission and distribution

M. Carpita

Haute Ecole d'Ingénierie et de Gestion du Canton de Vaud (HEIG-VD)

D.Dujic, A. Christe, S.Milovanovic, M.Utvic

Ecole Polytechnique Fédérale de Lausanne. Power Electronics Laboratory (EPFL PEL)

T. Schultz, C. M. Franck

Eidgenössische Technische Hochschule Zürich. High Voltage Laboratory (ETHZ HVL)

R. Razzaghi, Z. Wang, M. Paolone, F. Rachidi

Ecole Polytechnique Fédérale de Lausanne. Electromagnetic Compatibility Laboratory (EPFL EMC)

O. Galland, M. Allani, P. Favre-Perrod[1]

Haute école spécialisée de Suisse occidentale, Fribourg (HES-SO FR)

G. Tsolaridis, J. Biela

Hochschule Zürich. High Power Electronic Systems (ETHZ HPE)

March, 2019

[1] Point of contact for this report at Patrick.Favre-Perrod@hefr.ch

Content

Content 2
Summary 3
Introduction 4
General overview of DC options 6
MMC-based MVDC converters 11
AC/DC resonance analysis, interpretation and impact 15
Overview of HVDC breaker technologies 19
HVDC Circuit Breakers: Testing methods and challenges 23
Fault location principles 27
Concluding remarks 31

About SCCER-FURIES

SCCERs are the national competence center for energy research aiming to support the implementation of the Swiss Energy Strategy 2050 (ES2050) by transferring knowledge and technology among academic and industrial energy actors.
The Swiss Innovation Agency (Innosuisse) and the Swiss National Science Foundation (SNSF) established them in 2014 for 3 years (Phase I) and their mandate was renewed in 2017 for 4 more years (Phase II). Both research and operational activities are undertaken thanks to the financial support of Innosuisse (SCCER program).

The SCCER-FURIES is the center focused on the Swiss electrical infrastructure. We envision the enabling of seamless and sustainable powering of Swiss citizens' houses, businesses and communities. This will be achieved through development and demonstration, together with the Distribution and Transmission Network Operators, the essential knowledge and technologies for a sustainable and stable electrical infrastructure of the future will integrate cleaner and reliable power supplies and storage facilities.

Therefore, we put together capabilities of 250 experts of the power grid working for 32 labs (academic partners) and 56 companies (industrial partners) from all around Switzerland. Since 2014, 186 innovative solutions have been developed including 70 prototypes and demos, 26 patents and licenses, and 92 models and datasets.

Summary

Existing AC power systems, established more than a century ago, are increasingly challenged by DC technologies, enabled by significant advancements in the power electronics and related scientific fields. Three major application areas for DC transmission are established: transferring bulk power over long distances, interconnecting grids and connecting offshore wind. Medium and low voltage DC application become more appealing based on the improved controllability, more effective integration of renewable energy sources, higher power density and better compatibility with underground cables. Such technologies will be attractive for the Swiss energy transition as they might provide more effective solutions for the densification of power systems, the integration of converter-based renewable energy sources and pumped-storage plants. In order to achieve this, several research challenges however need to be overcome and standardization must further advance. Several academic partners from Switzerland contribute to these research problems in WP3: "Multi-Terminal AC-DC Grids and Power Electronics" within the SCCER FURIES. In this paper six major topics are presented:

- "General overview of DC options" where present and future applications of DC technologies as wells as MVDC grids development issues are discussed.
- "MMC-based MVDC converters" where selection of modular multilevel converter as a platform in order to provide flexibility in addressing multitude of applications and conversion needs is shown. Several topological adaptations are proposed, leading to novel converter topologies.
- "AC/DC resonance analysis" where analysis allowing to find the resonance location and to analyze resonance nodes contribution to critical mode. These frequency analysis methods permit to foresee network frequency behavior that is becoming important issue due to growing number of power electronics converters in the network.
- "Overview of HVDC breaker technologies" where basic requirements for fast and reliable HVDC circuit breakers as well as the differences to HVAC technology are introduced.
- "HVDC circuit breakers: testing methods and challenges" where the limits of HVDC circuit breakers are explored. In this section, a flexible, modular high current source is presented. The source is intended to act as a hardware-in-the-loop test bench for future HVDC circuit breakers, by driving highly dynamic and arbitrary current waveforms through dynamic loads (e.g. DC arc).
- "Fault location principles" where the significant influence of fault location on the network security of supply and quality is drawn. A newly-developed technique which is based on the electromagnetic time reversal (EMTR) theory that can be applied to radial/meshed AC/DC power transmission or distribution networks is presented and compared to other Travelling Wave – based methods.

The outputs and outlooks are drawn in order to conclude the paper.

Introduction

Existing power systems are mainly using AC technology since the infrastructure has been developed over many years. The first generation of HVDC schemes had following disadvantages: low available voltage, consequently high currents, high cost, no "DC transformer" technology; and could not therefore compete with AC solution. Thanks to developments in power electronics, bulk power transmission the use of HVDC technologies to connect generation sites and consumers separated by large distances continuously rose. The cost of HVDC transmission is lower than for HVAC transmission since lower line / cable costs and lower power losses for the transmission distances longer than certain value compensate larger capital investments into substation equipment. Due to relatively short line distances, highly meshed networks, well defined and standardized voltage levels as well as equipment of MV and LV networks, DC lines are rarely used at this level. However, there are various potential applications for DC technology on MV and LV levels: interconnecting MV networks, decentralized generation integration, DC industrial installations, DC districts, electric vehicles power stations etc. [1]. The main difficulties are the lack of standards, the unavailability of conversion equipment and difficulties with system protection.

Two main HVDC converter topologies are used worldwide: Line Commutated Converter (LCC), also called Current Source Converters, and Voltage Source Converters (VSC) of several types. A new VSC concept, Modular Multi-level Converter (MMC) was introduced in 2003 [2]. A large number of sub-modules allows high quality multi-level output AC voltage waveforms generation, reducing needs for filtering on the output. This significantly reduces the system size.

Due to increasing number of grid-connected power electronic converters [3]-[4], the risk to introduce harmonics into power system is rising which can be amplified by resonances in the network and consequently lead to overvoltages and damages. In practice, the link between harmonics, network resonance and their potential effects on power system is often uncertain. The coupling of network levels with transformers allows resonance to "propagate" from one network to another [5]. This increases the complexity and necessity resonance analysis studies.

VSC HVDC technology is considered as the basis for meshed multi-terminal (MT) DC network. One of the major challenge in realizing MTDC networks is fault handling. In point to point connections, faults require de-energizing the link, which can be realized on the AC side of the converters. For MTDC networks, this approach is not feasible anymore, as the failure of a single connection would require shutting down the complete grid. Consequently, for a safe and reliable operation of grids, HVDC circuit breakers are required.

The stresses (transient fault currents and voltages) are fundamentally different in DC compared to AC systems due to the system impedances. The system impedance in AC is mainly the line and transformer inductance, whereas in DC this is only the very low system resistance and line inductances for transients. The rates-of-rise and peak values of the transient fault currents are much higher in DC than AC. Circuit breakers need to operate on time scales of ms (instead 10's of ms) and need to dissipate most of the energy stored in the system inductance during current interruption. The stresses are considerably different and more demanding, but due to the non-existing field experience they cannot be quantified. First HVDC circuit breaker prototypes have been investigated in the 1970s and 1980s due to the growing application of line commutated converters [6]-[8]. For modern VSC systems, the requirement for fast mechanical operation constitutes a major challenge [9]. This does not only apply to fast actuation, but also to changing interruption requirements for mechanical circuit breakers. Furthermore, progress in semiconductor device performance also enables a much broader variety of topologies that appear feasible to interrupt fault currents.

In order to minimize the adverse impact of faults on power system security, reliability and quality of supply the improved fault location methods are required. The impact of fault location on the network is major. This becomes even more complex for MTDC networks. Dedicated fault location methodologies have been developed for the specific case of distribution networks with the main objective of improving the quality and reliability of the power supply provided to end-users. The rapid growth in size and complexity of the transmission systems (e.g. integration of high voltage AC and DC systems) requires accurate and extremely rapid fault location methods [10]. For distribution systems, the fault location function is even more challenging due to presence of distributed generation units capable to have detrimental effects on the accuracy of fault location functions, significant asymmetry between the overhead lines phases, and possible significant effect of the fault impedance on the fault location accuracy [11]-[12]. Fault

location methods can be classified in two main categories: phasor-based and travelling wave-based methods [11]-[12]. This report will focus on the latter category.

References

[1] GE Grid Solution, "High Voltage Direct Current Systems," Atlanta, GA 30339 USA, 2016.

[1] A. Lesnicar and R. Marquardt, "An innovative modular multilevel converter topology suitable for a wide power range," *IEEE PowerTech Conference*, Bologna, 2003.

[3] X. Chen, H. Sun, J. Wen, W.-J. Lee, X. Yuan, N. Li and L. Yao, "Integrating Wind Farm to the Grid Using Hybrid Multiterminal HVDC Technology," *IEEE Trans. Industry Applications,* vol. 47, pp. 965-972, 2011.

[4] "Planned HVDC projects listing prepared for the HVDC and flexible AC Transmission Subcommittee of the IEEE Transmission and Distribution Committee," 2013 [Online]. Available: http://www.ece. uidaho.edu/hvdcfacts/Projects/HVDCProjectsListing2013-planned.pdf

[5] O. Galland, D. Leu, V. Berner, P. Favre-Perrod, "Resonance Analysis of a Transmission Power System and Possible Consequences of its Undergrounding," in *DEMSEE 2015 – 10th International Conference Deregulated Electricity Market Issues in South-Eastern Europe*, Budapest, Hungary, 2015.

[6] W. Pucher, "Fundamentals of HVDC Interruption," *Electra*, vol. 5, pp. 24–38, 1968.

[7] A. Greenwood and T. Lee, "Theory and Application of the Commutation Principle for HVDC Circuit Breakers," *IEEE Trans. Power Appar. Syst.*, vol. PAS-91, no. 4, pp. 1570–1574, Jul. 1972.

[8] B. L. Damsky, I. Imam, and W. Premerlani, "A New HVDC Circuit Breaker System Design For -+ 400 kV," *7 IEEE/PES Transm. and Distr. Conference*, 1979., 1979, pp. 230–236.

[9] Cigre Technical Brochure, "Technical Requirements and Specifications of State-of-the-Art HVDC Switching Equipment", 2017.

[10] AEMO, "Review of the Black System South Australia report system event of 28 September 2016," Australian Energy Market Operator, Tech. Rep., 2017.

[11] M. M. Saha, J. J. Izykowski, and E. Rosolowski, *Fault Location on Power Networks*, vol. 25. Springer Science & Business Media, 2009.

[12] "IEEE Guide for Determining Fault Location on AC Transmission and Distribution Lines." 2005.

General overview of DC options

Abstract

The large-scale application of DC technology in power systems began in long distance transmission and transportation applications, best suited for the then available current source converter technologies. The availability of high-power voltage source converters further improved the attractiveness of HVDC for demanding applications like weak grids and offshore locations. Three major application areas for DC transmission are now established: transferring bulk power over long distances, interconnecting grids and connecting offshore wind.
Beyond this, medium and low voltage DC application become more appealing based on the improved controllability, more effective integration of renewable energy sources, higher power density and better compatibility with underground cables. Such technologies will be attractive for the Swiss energy transition as it might provide more effective solutions for the densification of power systems, the integration of converter-based renewable energy sources and pumped-storage plants. In order to achieve this, several research challenges however need to be overcome and standardisation must further advance.

Introduction to HVDC technology

Historically, AC has dominated in the power systems industry. AC eventually proved superior for several reasons. Disadvantages of early DC were the low voltage available, meaning higher currents, high cost, no "dc transformer" technology available, limiting distance between generation and load. Nowadays, thanks to developments of the Power Electronics technologies, the superiority of AC over DC is no longer neither evident, nor true. On one side, semiconductors devices, circuits, systems, and applications are continuously improving at all levels, allowing for developing efficient DC converters. On the other, emerging resources, energy storage, consumer devices and other systems supply or are operated at DC power.
Established worldwide applications making use of DC are [1]:
HV: Transmission Infrastructures – High Voltage Direct Current Systems
LV: Devices and Equipment Operated at Low-Level DC (Consumer Electronics, Residential and Commercial); Renewable Energy Systems producing DC Output Power (e.g., solar); Energy Storage Technologies with DC Output and Integration through DC Interconnections; Transportation Electrification and DC powered Electric Vehicles; and Enhancement of Energy Efficiency via DC supply of Data Centers, Information Technology and the Internet. In this list MV applications are clearly missing and will be analysed below.

Two main topologies are worldwide used for HVDC application, the Line Commutated Converter (LCC), also known as "Current Source Converter" and the Voltage Source Converters (VSC).
LCC, firstly introduced by the middle of the last century, is a well-proven technology that has dominated the HVDC market for decades [2]-[3]. An LCC-HVDC is made by two (typically 12 pulses) thyristors converters, sharing an inductor on the DC-link [4]-[5]. The first converter works as a rectifier on a first AC network, while the other one works as an inverter on a second AC network. The inductor imposes the DC current, while the AC networks impose the commutation of the converter's thyristors. Typically, a point-to-point connection is chosen.
Those systems are quite robust with respect to the DC side short circuits, but to avoid commutation problems they require an AC networks with high short circuit power. AC filters, and reactive power auxiliary systems are mandatory. The LCC-HVDC is used primarily for bulk electrical transmission over long distances, overland or subsea, and for interconnecting separate power grids where conventional AC methods cannot be used. Today there are more than 100 HVDC installations all over the world. A classic HVDC transmission typically has 100–10'000 MW power range. They use overhead lines, or undersea/underground cables, or a combination of cables and lines.
By the end of the last century, the interest of solution based on 2 and 3 level VSC has been demonstrated. In this case, the power converter is typically a three-phase bridge, whose valves are made of series connected IGBTs. The converter has a huge DC link capacitor and are Pulse Width Modulation (PWM) commutated. A minimum of AC filter is required, and no reactive power auxiliary systems are necessary. Both real and reactive power can be separately controlled, allowing more flexibility in systems. However, all VSC systems require a careful DC link short circuit protection strategy. In 2003 it has been introduced a new VSC concept, the Modular Multilevel Converter (MMC) [6]. MMC is a new concept, since it is no longer based on the hard switching of a single or double voltage source

with a PWM command, but instead it creates the AC voltage by putting in series several voltage sources (i.e. modules). The first MMC VSC HVDC has been put in service in 2010 by Siemens [7], and is today gaining more and more diffusion.

HVAC and HVDC short comparison

HVDC allow more flexibility or increased functionality compared to HVAC solutions [8].

- Inductive and capacitive elements of overhead lines and cables put limits to the transmission capacity and the transmission distance of AC transmission links. This limitation is of particular significance for cables. Depending on the required transmission capacity, the system frequency and the loss evaluation, the achievable transmission distance for an AC cable will be in the range of 40 to 100 km.
- HVDC allow the connection between two AC systems with different frequencies. Direct connection between two AC systems with the same frequency or a new connection within a meshed grid may be impossible because of system instability, too high short-circuit levels or undesirable power flow scenarios.

HVDC may overcome those problems. Typically, for a given transmission task, feasibility studies are carried out before the final decision on implementation of an HVAC or HVDC system can be taken. Reference [4] contains a typical cost comparison curve between AC and DC (LCC) transmission considering station terminal costs, line costs, intermediate reactive power compensation and capitalised value of losses, see Fig. 1 (based on [4]). The break-even distance is in the range of 500 to 800 km depending on a number of other factors, such as country-specific cost elements, interest rates for project financing, loss evaluation, cost of right of way etc.

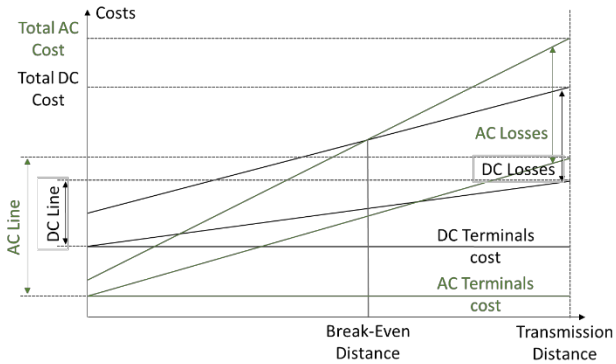

Fig. 1: HVAC and HVDC LCC cost comparison (based on [4]).

Concerning the two HVDC technologies available, VSC-HVDC does not allow the same power and voltage levels as LCC-HVDC [2]. However, VSC technology has several additional benefits, including (i) a significantly reduced land footprint compared to an equivalent LCC installation, (ii) less impact on the wider connected networks, in terms reduced harmonic and system disturbance, and (iii) the capability to provide certain ancillary services to network operators such as “Black Start” functionality, i.e. the capability to soft energize a power grid after a fault.

LCC converters can still provide a more economical alternative in the context of overall project costs; however, land costs, siting amenity and deep network impacts/costs are significant factors against their deployment in project design. VSC has become the default choice for ease of application within the highly integrated networks in Europe.

In [2] the progression of voltage and power ratings for both LCC and VSC HVDC is shown. The evident tendency for both LCC and VSC technologies is to increase both power and DC link voltage level. China has introduced its own HVDC grid based on 1.1GV technology.

As far as the HVDC supply in Europe is concerned, competition is limited to three suppliers of HVDC converters, Siemens (Germany), ABB (Sweden) and GE Grid Solutions (UK – previously Alstom) and four primary suppliers of HVDC cable ABB (Sweden), Prysmian PowerLink (Italy), Nexans (Norway) and NKT (Denmark). Other non-european manufacturers exist, mainly in China and Japan. However, non-European suppliers face a number of market entry-barriers, including: meeting different technical standards, developing EPC (Engineer, Procure, Construct) project execution methods, competition from incumbents, weaker supply chain support, high cost of shipping and customer inertia [9].

HVDC common applications

The main HVDC applications can be assembled in three groups: 1. Bulk power transfer over long distances; 2. Grids interconnection; 3. Offshore wind turbines connection to a grid. The features for each application are presented in Table I [10].

TABLE I
Main applications of an HDVC system (LCC and VSC).

Applications	Features
Transferring Bulk Power Over Long distances	•LCC point-to-point scheme is ideal for the bulk transfer of power utilizing overhead lines over long distances providing a fully flexible, controllable and environmentally friendly solution. •Maximizes transmission of substantial power utilizing UHVDC up to 800kV •Improves environment impact as a result of the smaller towers and right of way requirements •Increase power capacity up to 3 times more than AC circuits
Interconnecting Grids	•Exchanges energy between two unsynchronized AC systems operating at high power and in extreme temperatures (up to +55 °C). •Provides fully controllable and flexible dynamic reserve power support. •Manages fault propagation providing a power "firewall" between the interconnected networks.
Connecting Offshore Wind	•Is the most economical and feasible solution for connecting submarine cable applications. •Offers full control and flexibility in managing the intermittent and variable generation. •Provides a low loss solution, with the most efficient method of transmission technology. •Enables the controllability of intermittent power •Optimizes the use of submarine cables

MVDC and LVDC hybrid distribution grids

The emerging approach in MV and LV is not to replace existing AC grid by new DC grids but instead to integrate the two technologies and to benefit from both approaches. Actually, MVDC are still in their infancy [11], only few examples of actual MVDC grids can be found worldwide. An interesting example is the RWTH Aachen University Campus [12].

The main reasons to introduce a DC grid are [13]-[14]:

- *Improvement in grid control*: DC-Grids are less prone to instabilities and more flexible to power flow and voltage control than AC grids. The power flow in AC grids is controlled by voltage amplitude and phase angle, and unwanted power flow and reactive currents must be taken into account. On the contrary, power flow in DC grids depends only on voltage amplitude, so DC current follows voltage values and lowest resistance paths (load flow through MVDC). However, intelligent substations are required in order to manage the power converter control issues described below.
- *Decentralized generation integration*: AC Distribution Grids are typically radial. DG integration like renewables, storage and e-Mobility is difficult. A possible solution could be a hybrid approach [14], by inserting a DC corridor between two separate feeders allowing also a better AC grid use, for example avoiding overrating it to manage a faulty condition of one of the connected feeders.
- *Increasing of the power of existing infrastructure*: Convert from existing AC to DC system allows for a greater power transfer capability making use of the same cable.
- *Reducing lines visual impact and footprint*: DC level allows using lines with lower heights (<15 m), wood poles or simple steel structures.
- *Remote load supply*: for certain kind of loads a DC transmission could be advantageous, by replacing long AC corridors.

MV and LVDC grid applications

Some MV and LV grid application examples are:

- *Electrical ship*: This can be considered as the first example of autonomous DC grid [11]. The reasons for moving to DC distribution in ships were (i) fuel savings thanks to the elimination of the service generators, making full energy use from the ship propulsion system and (ii) space savings, thanks to the elimination of bulky transformers since there is no need in impedance matching and AC voltage scaling.
- *Office blocks and shopping centres*: The DC grid would distribute the power (e.g. from PV), store it (e.g. batteries) and use it to supply lights, computers, communication devices, data-center, building monitoring/automation system and charging points for electric vehicles.
- *Rural applications*: The reliability can be increased by means of energy storage systems (e.g. batteries).
- *DC districts*: DC-grid and energy management in a DC quarter would allow lower infrastructure cost, higher efficiency and bi-directional power flow.
- *DC industrial installations*: The production process in certain industries like the chemical and steel industries requires direct current due to requirements by the process itself or due to reduced consumption compare to an alternative process in AC.
- *Electric traction*: DC traction systems exist from the beginning of the last century, and are already integrated and connected to the AC distribution system. Light rail typically is 750 Vdc. Belgium, Spain, Italy, Russia use 3000 Vdc, France and Netherlands use 1500 Vdc. The low utilisation of the large capacity of the railway infrastructure (12%) will allow building DC systems for example for the fast charging of electric vehicles.

- *Electric vehicles power station*: DC (co-)infrastructure allows grid integration of fast-charging stations using already existing AC infrastructure.

MVDC grids development issues

Experiences for public MVDC grids do not exist and extensive standards or norms for such public MVDC grids are not specified. Standardisation is still to come and several issues must be addressed. Among them the following main issues can be listed [15]:

- Standard nominal operating voltage and isolation requirements definition.
- Power converters technology and topology.
- Technical restrictions for power converters use (i.e. maximum allowed currents).
- Grid structure, related to the supply reliability definition.
- Line configuration, namely asymmetric monopole, symmetric monopole and bipolar configuration, to facilitate the prosumer connection.
- Grid voltage and power flow control.
- Grid protection.

Several issues still require research efforts.

An MVDC is an electrical grid where generation, storage or loads are connected to the distribution system through power converters. The dynamics of the grid is established by feedback control circuits. This is different from AC grid systems, where the stability partly depends on the dynamics of rotating machines. The stability of a power bus becomes a control problem, concerning the interaction of the various power converters. This means that the design of each converter must include two different aspects: (i) the local control of the corresponding generator or load, and (ii) the interaction with the other converters in the same bus. Several power electronics converters typologies, as well as their local and system control, must be further developed in order to obtain reliable DC grids. We can cite here Power converters based on MMC approach, Medium-Voltage High-Power DC-DC Converters, Multiport DC-DC Converters for LV distribution, Dual-Active Bridge as the main "brick" for building the DC grid. SCCER-Furies members are actively involved in several of those problematics [16]-[19].

The main electromechanical companies in Europe are proposing their own approach to MVDC systems [13], [20].

Examples of DC grid schematics

The lack of standardisation does not allow for giving "standard" examples of DC grid. An example of two different MVDC configurations, replacing an MVAC is presented in [21]. This example shows an increase of the relative annual energy yield in MVDC configuration cases. Fig. 2 shows the comparison between a classic AC and LVDC infrastructure for a home or office building.

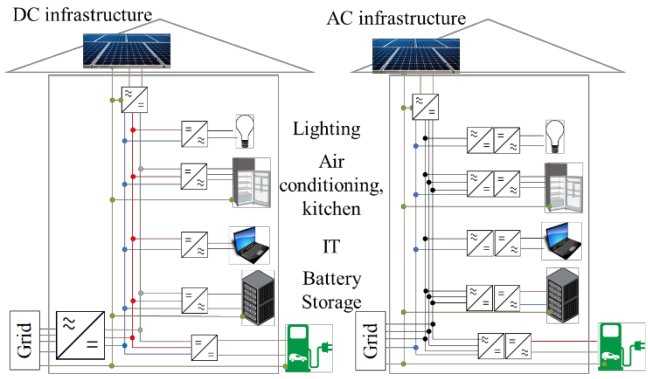

Fig. 2: Classic AC and LVDC infrastructure for home or office building.

Application of the DC technologies in Switzerland

Swiss DSO by introducing a MVDC systems can benefit from all the aspects listed in the Section "MVDC and LVDC hybrid distribution grids", namely featuring a better integration of decentralized supplies, increase the power of existing infrastructure, reduce lines visual impact and footprint, supply remote loads. Concerning the application listed in Section "MV and LVDC grid applications", the most interesting for Switzerland are the supply of office blocks and shopping centres and DC districts, the rural applications, the DC industrial installations and the electric vehicles power station.

The structure of the Swiss grid will probably not require the installation of LCC-HVDC plants. However, VSC-HVDC could be interesting for the additional features they can add the AC grid, also in light of Switzerland's role as a transit corridor within the interconnected European System. Finally, DC options might also be in a good synergy with improved hydro storage plants (e.g. varspeed pumped-storage), which will increase the dynamic requirements on the existing power system.

References

[1] G. L. Kusic, G. F. Reed, J. Svensson and Z. Wang, "A case for medium voltage DC for distribution circuit applications," *IEEE/PES Power Systems Conference and Exposition*, Phoenix, AZ, 2011.

[2] M. Barnes, D. V. Hertem, S. P. Teeuwsen and M. Callavik, "HVDC Systems in Smart Grids," *Proceedings of the IEEE*, vol. 105, no. 11, pp. 2082-2098, 2017.

[3] ABB, "Special Report 60 years of HVDC," ABB review, 2014.

[4] Siemens, "High Voltage Direct Current Transmission – Proven Technology for Power Exchange," Erlangen, 2011.

[5] ABB, "HVDC Light, it's time to connect," 2012.

[6] A. Lesnicar and R. Marquardt, "An innovative modular multilevel converter topology suitable for a wide power range," *IEEE PowerTech Conference*, Bologna, 2003.

[7] J. Gerdes, "Siemens debuts HVDC PLUS with San Francisco's trans bay cable," *Living Energy*, vol. 5, p. 28–31, July 2011.

[8] High Voltage Direct Current Transmission, 2011 [online] Available: www.siemens.com/energy/hvdc

[9] Nationalgrid, UK, "UK Electricity Interconnection: Driving competition and innovation in the HVDC supply chain," 2016.

[10] GE Grid Solution, "High Voltage Direct Current Systems," Atlanta, GA 30339 USA, 2016.

[11] G. F. Reed, B. M. Grainger, A. R. Sparacino and Z. Mao, "Ship to Grid: Medium-Voltage DC Concepts in Theory and Practice," *IEEE Power and Energy Magazine*, vol. 10, no. 6, pp. 70-79, 2012.

[12] N. Soltau, H. Stagge, R. W. D. Doncker and O. Apeldoorn, "Development and Demonstration of a Medium-Voltage High-Power DC-DC Converter for DC Distribution Systems," *IEEE 5th Interna-tional Symposium on Power Electronics for Distributed Generation Systems (PEDG)*, Galway, 2014.

[13] Siemens, "MVDC PLUS Medium Voltage Direct Currents Managing the future of the grid," *Siemens AG*, 2017.

[14] R. W. De Donker and M. Stieneker, "Medium-voltage DC distribution grids in urban areas," *IEEE 7th International Symposium on Power Electronics for Distributed Generation Systems (PEDG)*, Vancouver, BC, 2016.

[15] J. Priebe, N. Wehbring and A. Moser, "Planning and Design of Medium Voltage DC Grids– An Overview," *3rd International Universities Power Engineering Conference (UPEC)*, Glasgow, 2018.

[16] A. Christe and D. Dujic, "Modular Multilevel Converter Control Methods Performance Benchmark for Medium Voltage Applications," IEEE Trans. Power Electr., 2018.

[17] E. T. Louokdom, D. Siemaszko, S. Gavin, D. Leu, P. Favre-Perrod and M. Carpita, "Use of Modular Multilevel Converter in multi-terminal DC transmission network: Reduced scale set-up and exper-imental results," *19th European Conference on Power Electronics and Applications (EPE'17 ECCE Europe)*, Warsaw, 2017.

[18] R. Faerber and C. M. Franck, "Modular high-precision dielectric spectrometer for quantifying the aging dynamics in (Sub-)picofarad polymeric specimens," IEEE Trans. on Dielectrics and Electrical Insulation, vol. 25, no. 3, pp. 1056-1063, 2018.

[19] G. Tsolaridis and J. Biela, "Interleaved hybrid control concept for multiphase DC-DC converters," IEEE Energy Conv. Congr. Expo. – ECCE, Cincinnati, OH, USA, 2017.

[20] ABB, "Technical Application Papers No. 24 Medium voltage direct current applications," *ABB S.p.A.*, Dalmine (IT), 2017.

[21] R. W. De Doncker and H. A. B. Siddique, "Evaluation of DC Collector-Grid Configurations for Large Photovoltaic Parks," IEEE Trans. on Power Deliv., pp. 311-320, 2018.

MMC-based MVDC converters

Abstract

Existing AC power systems, established more than a century ago, are nowadays being challenged by DC technologies, enabled by significant advancements in the power electronics and related scientific fields.
Power Electronics Laboratory at EPFL has been active in research and development of new conversion technologies for high-power medium-voltage direct-current power distribution networks. To provide flexibility in addressing multitude of applications and conversion needs, modular multilevel converter has been selected as the platform, and several topological adaptations are proposed, leading to novel converter topologies. This is briefly summarized here, and supported with illustrative examples and results obtained over the last few years.

Introduction

The majority of exchange of the electrical energy is realized through the existing AC power systems, largely thanks to the availability and cost effectiveness of infrastructure developed over the many years, relying on relatively simple devices such as large synchronous generators and line frequency transformer. Thanks to the advancements in power electronics, bulk power transmission is increasingly using HVDC technology to bridge generation sites and consumer centers, separated by large distance. Despite somewhat larger capital investment into substation equipment, it is well understood and demonstrated that operational costs and power losses (provided transmission distance is longer than certain value) are more favored than equivalent HVAC systems.
In the medium voltage level of the distribution network, AC is almost exclusively used. There are multiple reasons for this associated with relatively short distances of the lines, highly interlinked and meshed network, well defined and standardized voltage levels as well as equipment. Nevertheless, there are various research activities being conducted to define the role and prospects of MVDC power distribution networks in the future energy systems. Some of the identified obstacles are lack of standards, unavailability of conversion equipment as well as difficulties with protection against the faults in these systems. Nevertheless, certain applications, such as marine power distribution networks [1] have made significant progress in adopting DC technologies.
Since recently, Modular Multilevel Converter (MMC) has emerged as highly efficient and flexible power electronics conversion structure, allowing for easy voltage scalability meeting the applications needs. Fig.1 illustrates the basic topology of the MMC, for AC-DC or DC-AC conversion, composed of six branches where each is realized as series connection of multiple series connected sub-modules. Two branches form a phase leg. Typically, MMC sub-modules are based on the half-bridge or full-bridge topology, depending on the application and conversion needs.
The main distinctive feature of the MMC, compared to classical voltage source converters (VSC) is the absence of the centralized DC link. Instead, energy is distributed among the capacitors of each sub-module, requiring certain control effort to be devoted to maintaining energy balance during regular operation. Large number of sub-modules allows for generation of high quality multi-level output AC voltage waveforms, reducing needs for filtering on the output, something that significantly reduces the size of the systems, especially considering high power and medium voltage applications. This is shown in Fig. 2, illustrating that joint action of number of sub-modules inside the MMC branch essentially resembles controlled voltage source.

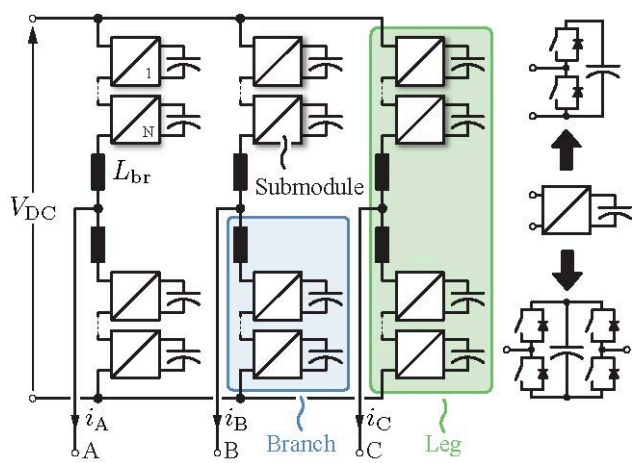

Fig. 1: Basic MMC structure illustrating two types of typically employed sub-modules.

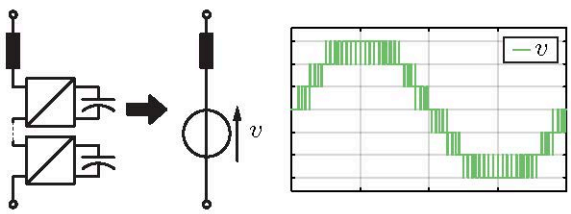

Fig. 2: MMC branch provides opportunity to realize high quality output voltage waveform.

MMC-based MVDC converter technologies development within the SCCER FURIES framework

Flexibility offered by MMC has been exploited to derive new topological variations for MVDC applications. Three examples are briefly presented here, developed within the framework of the SCCER FURIES.

Emergence of MVDC power distribution networks will require means to interface them with readily available LVAC grids. Connection of DC terminals of the MMC to the MVDC network leads to MVAC output voltage at the AC terminals. Simple and the most obvious solution, is to connect line frequency transformer between the AC terminals of the MMC and the AC grid, and adjust voltage levels on the AC side.

Instead, different approach has been followed, considering that MMC already requires branch inductances and exploring possibility to realize them as part of transformer structure. In other words, integration of line frequency transformer into MMC is considered as viable approach to reduce number of components in the system.

This is illustrated in Fig. 3, where Galvanically Isolated Modular Converter (GIMC) is shown. It features three-phase transformer with three winding per phase, designed in such way to cancel flux contributions from DC currents present in each branch of the MMC [2]. Such a transformer structure essentially provides the function of branch inductances as well as galvanic isolation and voltage adaptation for the AC grid. Despite these hardware modifications positively impacting the size of the overall system, control principles of the MMC are preserved and without significant modifications, all the known control algorithms can be deployed, as discussed in the [3]. Both half-bridge and full-bridge sub-modules can be used for the implementation.

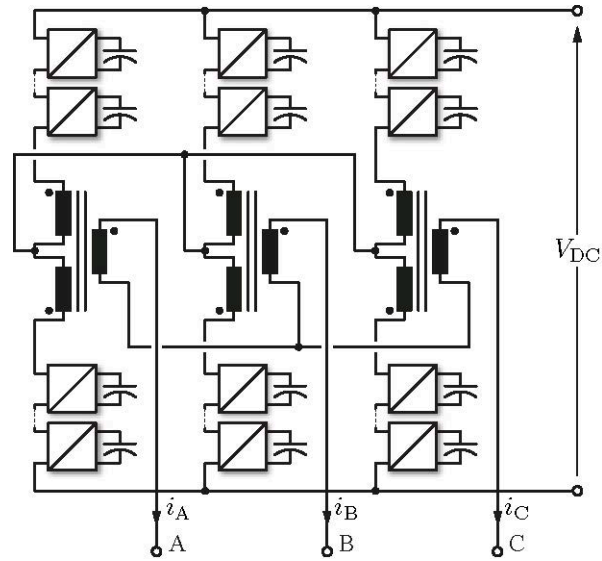

Fig. 3: GIMC – Galvanically isolated modular converter, featuring integrated magnetic structure into the MMC structure.

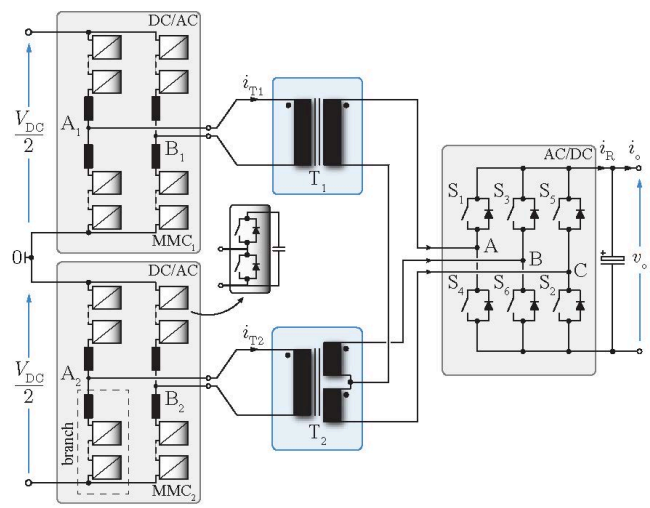

Fig. 4: High-power DC-DC converter utilizing Scott transformer connection.

To address the needs to interface two MVDC grids of different voltage level, while providing galvanic isolation and ability to operated in case of partial loss of supply, converter as shown in Fig. 4 is proposed. It features Scott Transformer Connection (STC), for the first time operated at medium frequency and used for the DC-DC conversion. The STC, achieved by appropriate connection of two single-phase transformers, allows for creation of balanced three-phase voltage from set of in-quadrature single-phase, or vice versa. For those reasons, two MMC-based single-phase converters are connected to STC on the high voltage side, while simple six-step operated inverter is connected on the three-phase side, providing lower output voltage. Principles and details of the operation are discussed in details in [4].

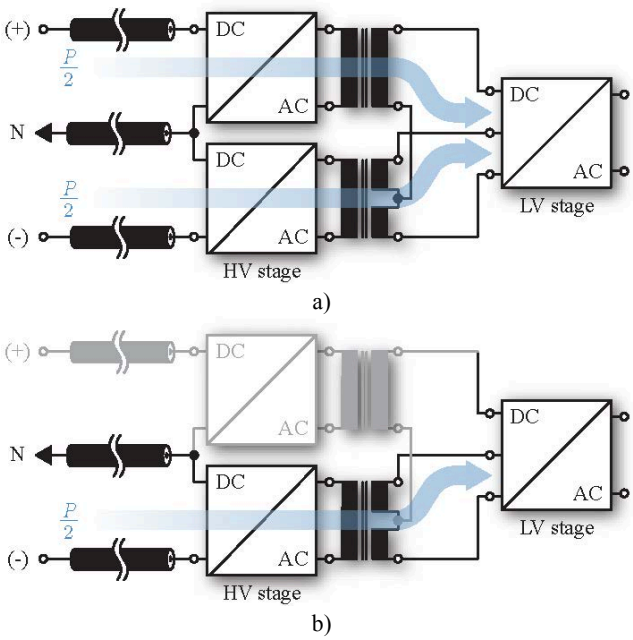

Fig. 5: MMC-based DC-DC converter utilizing STC during a) normal operation in b) de-rated mode.

Important characteristic of the topology from Fig. 4, is the ability to provide fault tolerant operation in case of loss of one pole in the MVDC grid (in case of bipolar network). This is shown in Fig.5a) where regular operation is illustrated with both MMC converter being in operation, while Fig.5b) demonstrates operation mode where upper MMC is out of function and system continues to operate in de-rated mode, delivering up to half of the rated power to the load. Ability to perform in this operating mode has some implications to the converter sizing, as discussed in [4], but this is beyond the scope of this chapter.

While increased interest into MVDC power distribution network requires developments of various conversion solutions, it also posses various questions related to stability of these systems and interactions between converters [5]. To be able to address these questions, high power high-performance equipment is needed providing great flexibility in testing of MVDC technologies.

Fig. 6 illustrates MMC-based MVDC amplifier, able to provide fast dynamic output voltage control on the DC side [6]. It is based on two MMC converters connected to separate windings of a 12-pulse transformer (3.3kVac) and providing ±5kVdc at output of each MMC. To achieve both polarities of output DC voltage full-bridge sub-modules are used for the implementation.

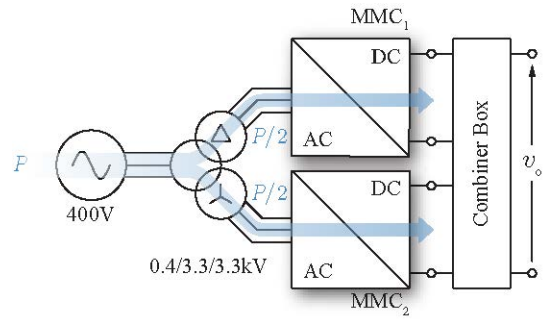

Fig. 6: MMC-based MVDC amplifier.

DC outputs of two MMCs can be connected either in parallel (to double the current ratings) or in series to, effectively making it possible to achieve ±10kVdc at the output. Such MVDC amplifier can be used either to emulate MVDC grid, to supply other converters or serve the purpose of system identification by allowing injection of various test signals into the loads connected on the DC side.

MMC research platform related to SCCER FURIES

To practically demonstrate effectiveness of MMC in various conversion scenarios, Power Electronics Laboratory has been working on a design of a flexible and scalable medium voltage MMC hardware research platform.

Fig. 7 show simplified schematic of the MMC sub-module based on the low voltage IGBT modules and reconfigurable to both half-bridge and full-bridge configuration [7]. Capacitor bank is realized using several electrolytic capacitors (in parallel and series connection) with additional active balancing circuit preventing voltage deviations exceeding critical levels. Auxiliary power to the electronic circuits is provided by means of the Flyback converter supplied from the sub-module capacitors. Its magnetic structure is implemented in planar technology and has multiple secondary windings, providing power to the digital signal processor, four gate drivers and protection circuitry.

Sub-module controller is based on the low cost digital signal processor and it implements the control algorithm, collects voltage, current and temperature measurements and supervise various functions of the sub-module for proper operation. Communication with the upper layer controller is implemented by means of adequate protocol and fiber-optical link, easing the insulation coordination of the signal parts and simplifying the overall sub-module structure.

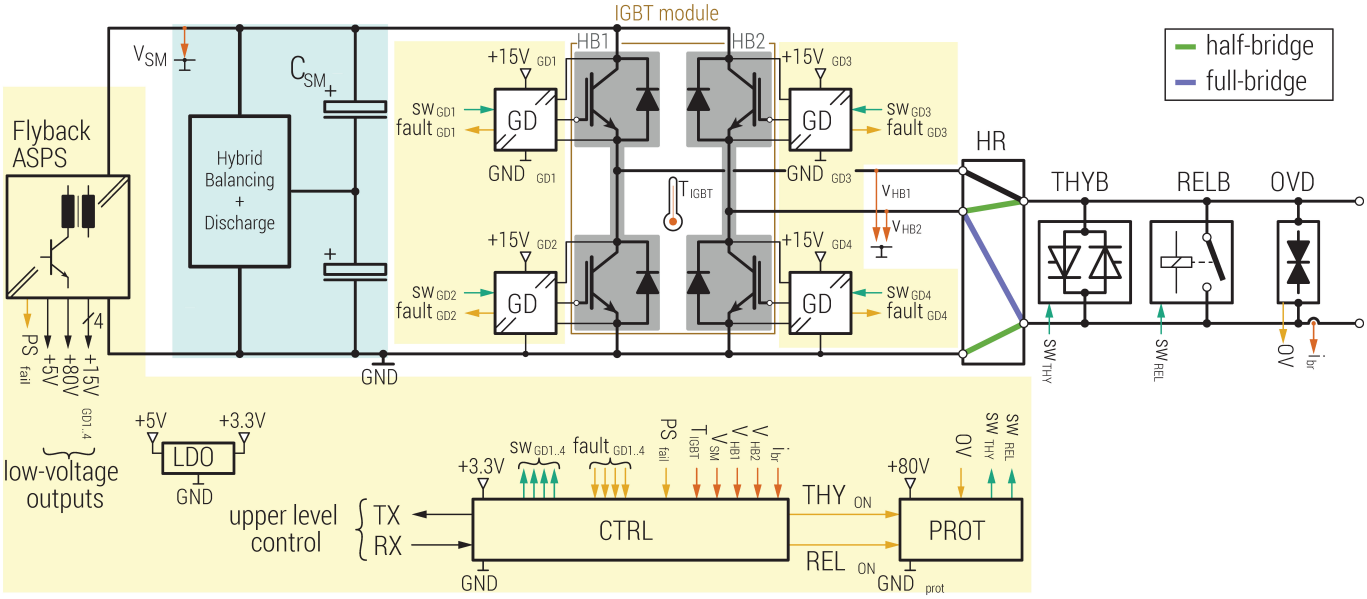

Fig. 7: Principal schematic of the MMC sub-module hardware.

Protection of the sub-module is implemented by means of the antiparallel connection of thyristors for fast current bypass and bi-stable relay for permanent bypass. Sub-module controller can activate protection in case that fault is detected. At the same time, additional overvoltage detection/protection circuit is implemented on the terminals of the sub-module, providing another layer of protection, independently from the controller. In case of fault, sub-module is effectively bypassed and removed from the MMC.

Fig. 8 shows physical appearance of the sub-module inside the metallic enclosure as well as other mechanical parts of the MMC research platform. Due to the modularity of the design, various topological reconfigurations are possible allowing for the same hardware to be used for different application scenarios.

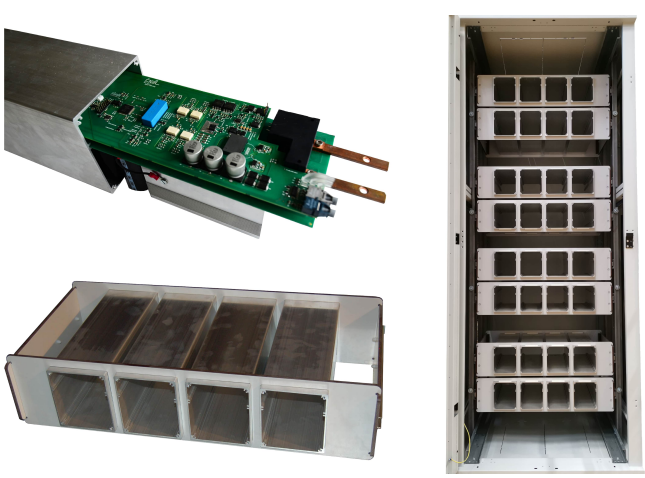

Fig. 8: MMC sub-module (up-left), drawer hosting four sub-modules (down-left) and cabinet of one phase leg (right).

All the configurations presented in the document are possible to be experimentally tested, as well as many others, as long as electrical ratings of the MMC research platform are not violated. Development of this research platform was important for effective experimental demonstration of novel conversion structures, as well as for support of other research projects involving various industrial partners or receiving funding from Swiss and European agencies.

References

[1] U. Javaid, D. Dujic, W. van-der Merwe, "MVDC marine electrical distribution: Are we ready?," in *Proc. 41st Annual Conference of the IEEE Industrial Electronics Society – IECON*, pp. 823-828, 2015.

[2] A. Christe and D. Dujic, "Galvanically isolated modular converter", *IET Journal on Power Electronics*, vol. 9, Iss. 12, pp. 2318-2328, 2016.

[3] A. Christe and D. Dujic, "Modular multilevel converter control methods performance benchmark for medium voltage applications," (accepted) *IEEE Trans. On Power Electronics*, 2019.

[4] S. Milovanovic and D. Dujic, "MMC-based high power DC-DC converter employing Scott transformer," in Proc. *International Power Conversion and Intelligent Motion Conference – PCIM*, Nuremberg, Germany, 2018.

[5] U. Javaid, F. Freijedo, D. Dujic, W. van-der Merwe: "Dynamic assessment of source-load interactions in marine MVDC distribution", *IEEE Trans. on Industrial Electronics*, vol. 64, no. 6, pp. 4372-4381, 2017.

[6] S. Milovanovic, M. Utvic, D. Dujic, "Flexible medium voltage DC source utilizing series connected modular multilevel converters," in Proc. *21th European Conference on Power Electronics and Applications – EPE-ECCE Europe*, Genova, Italy, 2019.

[7] M. Utvic, I. Polanco, D. Dujic, "Low voltage modular multilevel converter sub-module for medium voltage applications," in Proc. *International Power Conversion and Intelligent Motion Conference – PCIM*, 2019.

AC/DC resonance analysis, interpretation and impact

Abstract

Due to the growing number of power electronics converters in the grid implied by DC lines and renewable sources integration there is a risk related to the effects of harmonic currents. Network resonance modeling and analysis are discussed in this section. Frequency domain modeling, frequency scan and resonance mode analysis are presented and discussed. The impact on resonance response due to changes in the network topology as well as due to DC link reinforcement are drawn. The performed analysis allows to find the resonance location at each studied case and to analyze resonance nodes contribution to critical mode. These frequency analysis methods permit to anticipate the network frequency behavior. To conclude, the summary of contributions within the SCCER FURIES framework is shown.

Introduction

The number of grid-connected power electronic converters is increasing due to rising number of renewable energy sources (RES) and HV/MV DC lines [1]-[2]. Power electronic converters introduce harmonics into the power system, which can be amplified by resonances in the network. This can lead to overvoltages and therefore damages.

Harmonic sources are now well identified. In practice the link between harmonics, network resonances and their potential effects is however uncertain. Furthermore, the coupling of network levels with transformers allows resonances to "propagate" from one network level to another [3], which increases the resonance analysis study's complexity.

The secure operation of power systems requires power system resonances and its harmonic behavior evaluation. The observed malfunctioning of MV and LV equipment located near a transmission substation in the Eastern part of the Swiss EHV system due to resonances [4] confirms the need for investigation of harmonics. In HV subtransmission and MV distribution systems, the trend to replace overhead (OH) lines with underground (UG) cables reduced the resonance frequencies since UG cables are more capacitive than OH lines [3]. In LV distribution systems, the introduction of RES could lead to interferences between produced harmonics and communication systems [5]-[6]. In distribution systems, smart grid devices like smart meters, which use power line communications, are more susceptible to interference in cases where there is a high penetration of RES. Hence, methods and tools to simulate and predict the resonances in power system are needed at every power system level. The frequency dependent modelling of networks and their resonance analysis is composed of three following steps:

- Firstly, all network elements are modelled in the-frequency domain: OH lines and UG cables modelling is described in [7] and [8]-[9] respectively. The power transformer model above 2 kHz should include the effects of stray capacitances. The developed "grey-box" model is defined in [10]-[11]. The proposed power converter (MMC) model is described in [10]-[11].
- Then, the network admittance matrix is built for each studied frequency.
- Finally, the frequency scan method [8] is used to identify resonances (at which node at studied frequency) and the Resonance Mode Analysis (RMA) [12]-[14] performs the system resonance behaviour and indicates resonances origins.

Resonance analysis of the part of Swiss power system

The models and methods introduced in the previous sections are applied to an illustration example: the considered transmission (220 kV) and subtransmission (125 kV) Geneva region networks (64 nodes and 99 lines) are presented in Fig. 1. Power flow transits through the 125 kV network level are possible in case of congestions or outages in the 220 kV level. If line 31-36 is not available, power flows over unnecessarily long stretches of the 125 kV network may result. One of possibility to overcome this is to reinforce the 125 kV network by building a new HVDC line between nodes 6 and 38 (2.6 km), see Fig. 2.

Different operational topologies of the network are also investigated. Hence, the following case studies are performed:

- Case A: Current network, all switches are closed;
- Case B: Current network, switch in node 36 is opened;
- Case C: Current network with HVDC between nodes 6 and 38;

- Case D: Current network with HVDC between nodes 6 and 38, switch in node 36 is opened.

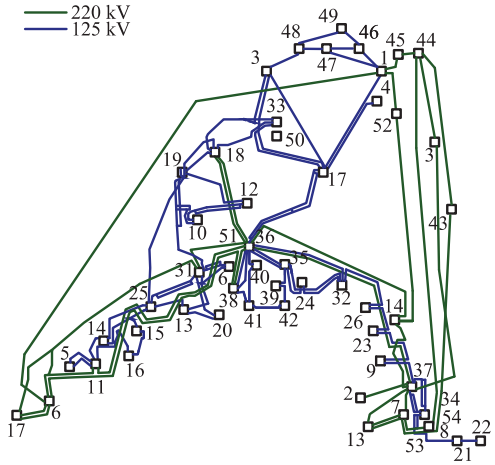

Fig. 1: Single line diagram of transmission and distribution networks of the Geneva region. (source Romande Energie).

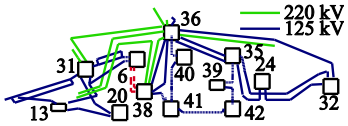

Fig. 2: New line location.

Fig. 3 shows the frequency scan results for the four studied cases. This example illustrates that the frequency scan study for each node impedance is not straightforward. RMA results are therefore needed in order to identify relevant resonance modes and contributing nodes.

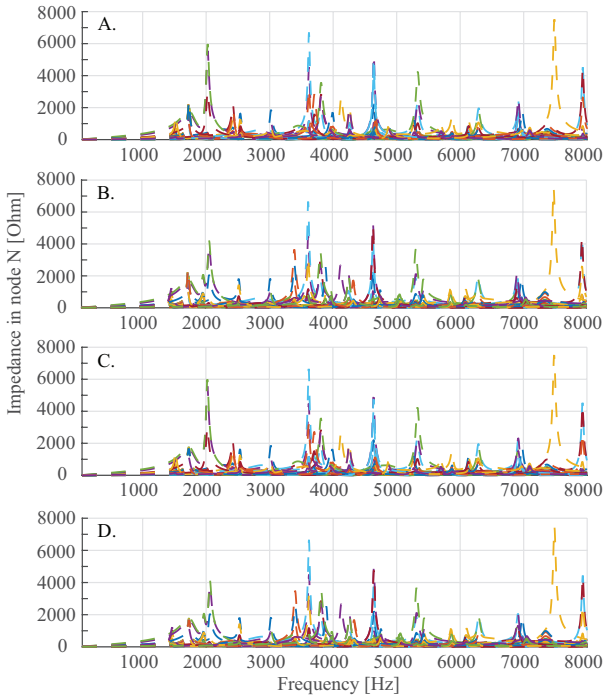

Fig. 3: Frequency scan, results for a phase: current network, current network with opened switch in node 36, the network with a HVDC link, the network with a HVDC link and with opened switch in node 36.

Fig. 4 illustrates the case of the current network with an opened switch in node 36 in comparison to the current network. The comparison of the current network with an HVDC link reinforcement and current network is presented in Fig. 5. Fig. 6 shows the RMA results of the current network with opened switch in node 36 and the current network with an HVDC link reinforcement and with opened switch in node 36.

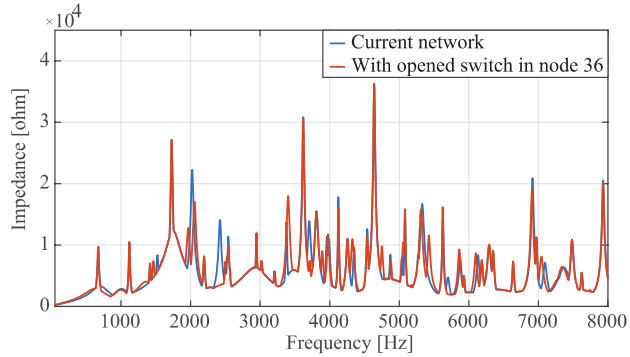

Fig. 4: Comparison of the Resonance Mode Analysis results (critical modal impedance) of the current network and current network with opened switch in node 36.

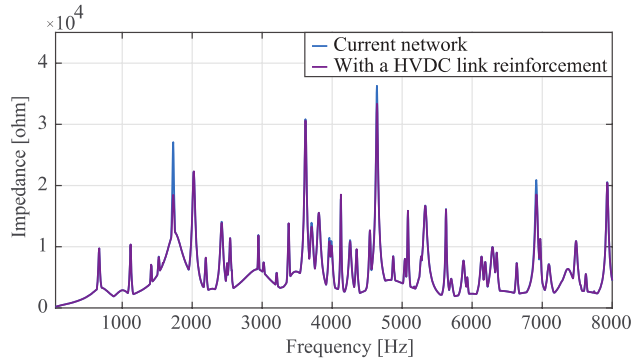

Fig. 5: Comparison of the Resonance Mode Analysis results (critical modal impedance) of the current network and the network with a HVDC link reinforcement.

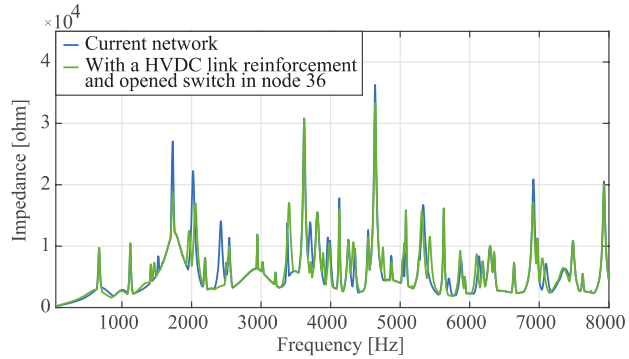

Fig. 6: Comparison of the Resonance Mode Analysis results (critical modal impedance) of the current network with opened switch in node 36 and the network with a HVDC link reinforcement and with opened switch in node 36.

The RMA results comparison of the current network with HVDC link reinforcement and the current network with HVDC link reinforcement and with opened

switch in node 36 is presented in Fig. 7. The RMA results comparison of all studied cases is presented in Fig. 8.

The first significant difference in resonance behavior is at 1523 Hz and is caused by change in switching mode in node 36, see Figs. 3 and 6. The resonance frequency is shifted from 1523 Hz to 1465 Hz. The first resonance change provoked by the HVDC link reinforcement is at 1730 Hz (Figs. 4 and 5). The resonance peak amplitude is decreased in case of an HVDC link reinforcement. The change of switching mode in node 36 does not affect this resonance peak.

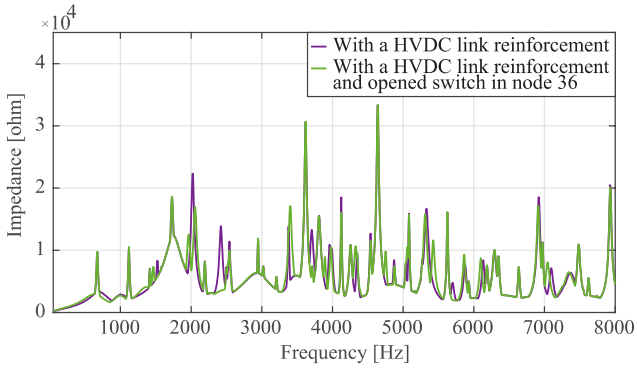

Fig. 7: Comparison of the Resonance Mode Analysis results (critical modal impedance) of the network with a HVDC link reinforcement and the network with a HVDC link reinforcement and with opened switch in node 36.

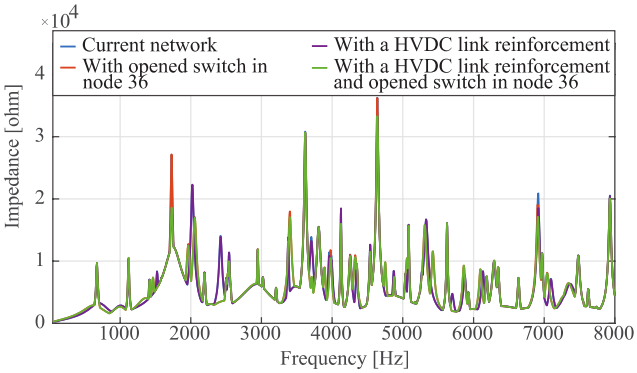

Fig. 8: Comparison of the Resonance Mode Analysis results (critical modal impedance) of the studied networks: current network, and current network with opened switch in node 36, the network with a HVDC link reinforcement, the network with a HVDC link reinforcement and with opened switch in node 36.

The first three nodes with the highest participation factors of the 4th, 6th and 7th resonance peaks are presented in Table I. First three resonance peaks are provoked by 220 kV nodes. In the fourth resonance peak the nodes with the highest participation factor remains the same for all cases. For the six resonance peak, the node share is changed with changed switching mode. Node 32's role is higher than in the current network case. For the seventh resonance peak, the nodes share remain the same for first three cases. However it is changing in case D where the role of 125 kV nodes is increasing.

The considered network changes lead to resonance peaks vanishing, additional peaks appearance, resonance amplitude decrease and peaks shift, see Table II.

TABLE I
Nodes with highestPF of the six resonance peaks

Current network		Changed switching mode		HVDC link reinforce ment		HVDC link reinforcement and changed switching mode	
N	f, Hz	N	f, Hz	N	f, Hz	N	f, Hz
4th resonance peak							
4	1523	4	1465	4	1523	4	1465
1		17		1		17	
17		1		17		1	
6th resonance peak							
22	2021	22	1965	22	2019	22	1963
21		21		53		21	
53		32		21		32	
7th resonance peak							
11	2192	11	2194	11	2195	32	2192
1		1		1		26	
45		45		45		1	

N – node, PF – participation factor; shaded values correspond to 220 kV nodes

TABLE II
Changes in studied networks resonance behavior

		Changed switching mode		HVDC link reinforce-ment	HVDC link reinforcement and changed switch-ing mode	
Resonance amplitude decrement (Hz)		2543 4126		1730 4639	1730 2543	
Resonance peak appearance (Hz)		2059		-	2058	
Resonance peaks vanishing (Hz)		2420 5703		-	2424 5703	
Reso-nan-ce peak shift (Hz)	Frequency at current network	1523	3382	-	1523	3384
	Frequency at link changed network	1465	3401	-	1465	3400

This studies show how changes in network topology affect the network resonance. On the subtransmission network example, the impact of a new transmission line is illustrated. There are no significant changes in the frequency scan and RMA results up to 1730 Hz. However, above this frequency there is a deviation in network resonance response. It is also shown that change of switching mode modifies the network frequency response. Network reinforcements can therefore change resonance nodes share.

Contribution of SCCER FURIES

In the SCCER FURIES several projects contributed in the network resonance studies. These projects address to improve the understanding in the resonance behavior and locate the resonance source.

- The project "Cable" aims to characterize the influence of network cabling on the resonance phenomena that may appear in the transport network. The interest for these phenomena is increased by the increasing number of converters (HVDC, FACTS, renewable producers, etc.) being planned in the European transport network and in supra-regional distribution networks. As a first step, harmonic models of these networks have been established and used for frequency and modal analyzes. The second part of the project, the modeling of the MMC converters, made it possible to provide a model combining the effect of the adjuster on the converter's own impedance as well as its injection of harmonic currents. On this basis, scenarios answer the question of the influence of the new DC lines posed at the beginning of the project. The integration of these two project components made it possible to set up a first procedure for evaluating the influence of DC lines in the presence of cable links. In addition, this project allowed four students from the HES-SO to perform their Bachelor's degree in a subject allowing them to establish a link with networks and concrete situations.
- The project “Eastern part of the Swiss EHV system” aims to analyze changes in Swiss EHV power system focusing on nodes close to Eastern part of the Swiss EHV system. Based on the resonance responses of the two studied networks (expanded Swiss Extra High Voltage (EHV) power system 2025 (Eastern part of the Swiss EHV case) and initial Eastern part of the Swiss EHV system configuration) the question concerning the necessity to install/use an active harmonics filter is answered.
- The project “AC/DC interactions” aims to analyze resonance behavior of current and expanded DSOs’ networks (AC link and DC link reinforcement), to predict possible resonance problems and to identify the origin of the resonance, to investigate the effects on the centralized control carrier signal. “Grey-box” transformer model is proposed where stray capacitances are taken into account: across each winding, between the primary and secondary windings and between the primary winding and the neutral of the transformer.
- The project “Embedded MTDC” aims to analyse power system exploitation and control as well as system resonance behavior under switch mode changes. This project is performed in an academic collaboration. HES-SO FR is responsible for the power system resonance analysis.

References

[1] X. Chen, H. Sun, J. Wen, W.-J. Lee, X. Yuan, N. Li and L. Yao, “Integrating Wind Farm to the Grid Using Hybrid Multiterminal HVDC Technology,” *IEEE Trans. Industry Applications,* vol. 47, pp. 965-972, 2011.

[2] “Planned HVDC projects listing prepared for the HVDC and flexible AC Transmission Subcommittee of the IEEE Transmission and Distribution Committee,” 2013 [Online]. Available: http://www.ece.uidaho.edu/hvdcfacts/Projects/HVDCProjectsListing2013-planned.pdf

[3] O. Galland, D. Leu, V. Berner, P. Favre-Perrod, “Resonance Analysis of a Transmission Power System and Possible Consequences of its Undergrounding,” in *DEMSEE 2015 – 10th International Conference Deregulated Electricity Market Issues in South-Eastern Europe*, Budapest, Hungary, 2015.

[4] A. Hammad, G. Koeppl and S. Laederach, “Harmonic voltage amplification in a distribution network due to resonance of transfer impedance to the EHV transmission,” in *CIRED 2005 - 18th International Conference and Exhibition on Electricity Distribution*, Turin, Italy, pp. 1-5, 2005.

[5] K. Temma, F. Ishiguro, N. Toki, I. Iyoda and J. J. Paserba, “Clarification and measurements of high frequency harmonic resonance by a voltage sourced converter,” *IEEE Trans. Power Delivery*, vol. 20, pp. 450-457, 2005.

[6] E. O. A. Larsson, M. H. J. Bollen, M. G. Wahlberg, C. M. Lundmark and S. K. Ronnberg, “Measurements of High-Frequency (2–150 kHz) Distortion in Low-Voltage Networks,” *IEEE Trans. Power Delivery*, vol. 25, pp. 1749-1757, 2010.

[7] E. Acha and M. Madrigal, *Power Systems Harmonics: Computer Modelling and Analysis*, New York, Wiley, 2001.

[8] J. C. Das, *Power System Analysis: Short-Circuit Load Flow and Harmonics. Second Edition*, New York: CRC Press, Taylor & Francis Group, 2012.

[9] R. A. Rivas, “Section 9: Overhead Transmission Lines and Undeground Cables,” in *Handbook of Electric Power Calculations, Third Edition*, New York, The McGraw-Hill Companies, 2001, pp. 9.1 - 9.33.

[10] O. Galland, L. Eggenschwiler, R. Horta, W. Sattinger, P. Favre-Perrod and D. Roggo, “Application of Resonance Analysis to AC-DC Networks,” *IEEE Trans. Power Delivery*, vol. 33, 1438-1447, 2018

[11] L. Eggenschwiler, O. Galland, D. Chollet, F. Decorvet, D. Roggo, P. Favre-Perrod, “Frequency scans and resonance mode analysis for resonance problems identification in power networks in presence of harmonic pollution,” in *CIRED 2017 – 24th International Conference and Exhibition on Electricity Distribution*, Glasgow, UK, pp. 650-654, 2017.

[12] W. Xu, Z. Huang, Y. Cui and H. Wang, “Harmonic resonance mode analysis,” *IEEE Trans. Power Delivery*, vol. 20, pp. 1182-1190, 2005.

[13] Y. Cui and W. Xu, “Harmonic resonance mode analysis using real symmetrical nodal matrices,” *IEEE Trans. Power Delivery*, vol. 22, pp. 1989-1990, 2007.

[14] Y. Cui and X. Wang, “Modal frequency sensitivity for power system harmonic resonance analysis,” *IEEE Trans. Power Delivery*, vol. 27, pp. 1010-1017, 2012.

Overview of HVDC breaker technologies

Abstract

High voltage direct current technology provides efficient means to transmit large amounts of electrical power over long distances. While point to point connections have been used for decades already, multiterminal grids have not been installed on a larger scale. The key enabling technology for grids are fast and reliable HVDC circuit breakers.
This chapter introduces the basic requirements for such circuit breakers and as well as the difference to HVAC technology. Furthermore, several proposed topologies are introduced and their key features are discussed. The chapter is concluded with a short list of contributions within the SCCER-FURIES.

Introduction

The technological drive towards multiterminal networks requires sophisticated fault handling capabilities. In point to point connections, faults require a shutdown of the connection, which can be realized on the AC side of the converters. For multiterminal networks, this approach is not feasible anymore, as the failure of a single connection would require to shut down the complete grid. Consequently, for a safe and reliable operation of grids, HVDC circuit breakers are required.
Current interruption in HVDC is a challenging process that differs considerably from the well-established solutions for interrupting fault currents in HVAC networks. In HVAC networks, current is interrupted by mechanical circuit breakers. If activated, mechanical contacts are opened and the resulting arc is quenched at a natural current zero crossing. The fault current typically reaches its steady state value before interruption takes place. As the system inductance limits the maximum fault current amplitude and components in HVAC networks are relatively robust against short circuit currents, an interruption at first current zero crossing is not required.
Due to the absence of current zero crossings, mechanical circuit breakers alone are not sufficient for short circuit interruption in HVDC grids. The rise of fault current is limited by the system inductance and its steady state value by the parasitic resistance of the grid. Consequently, high fault current levels can be reached, which might damage semiconductor devices in the converters. Additionally, a growing fault current results in increasing amounts of magnetic energy, stored in the system inductances, that has to be dissipated by the HVDC circuit breaker. This results in considerably stricter timing requirements compared to HVAC [1].
Another difference between HVAC and HVDC networks are the stresses during interruption. In AC, the current shape is determined by the grid (system voltage, frequency, network impedance). The voltage build up depends both on the grid (system voltage, impedance) and the circuit breaker (stray capacitance). In HVDC, the circuit breaker topology determines how the counter voltage is built up, which determines the current shape at interruption. The overvoltage is determined by the choice of the surge arrester that dissipates the stored magnetic energy. Consequently, the choice of topology and design of the HVDC circuit breaker has a considerable impact on the stresses it has to withstand [2]-[3].
First HVDC circuit breaker prototypes have been investigated in the 1970s and 1980s due to the growing application of line commutated converters [4]-[6]. The projected ratings in terms of voltage and operating current were already similar to what is discussed for modern VSC networks. However, due to the different converter type, timing requirements were considerably less strict.
For modern VSC systems, the requirement for fast mechanical operation constitutes a major challenge [1]. This does not only apply to fast actuation, but also to changing interruption requirements for mechanical circuit breakers (shorter arcing times, new current and voltage wave shapes, etc.). Besides, especially the progress in semiconductor device performance also enables a much broader variety of topologies that appear feasible to interrupt fault currents.

Overview of existing technologies

If a fault occurs in a DC system, converter currents start to increase, as the impedance in the system drops to the parasitic resistance and inductance of the system plus the current limiting inductor. In the beginning, a nearly linearly rising current can be observed. The maximum fault current is limited by the circuits remaining resistance.

Depending on the fault location and the connected equipment (overhead lines, cables), traveling wave phenomena can be observed. These lead to a change between phases of increasing and phases of decreasing current gradient, as illustrated in Fig. 1.

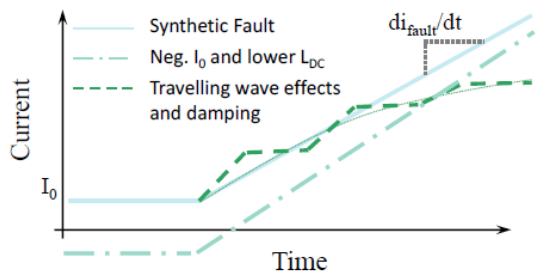

Fig. 1: Development of fault currents in HVDC systems without circuit breaker action [2].

The basic functions of an HVDC circuit breaker are to build up a counter voltage to revert the voltage drop across the system inductance and thus bring the fault current to zero.

The counter voltage can be build up by semiconductors or capacitors. While the performance of power semiconductors has considerably increased over the recent decades, their on-state losses still render them unsuitable for nominal current conduction [1].

Consequently, circuit breaker topologies for HVDC networks typically consist of three branches that split the tasks of nominal current conduction, counter voltage build-up and energy absorption (cf. Fig. 2).

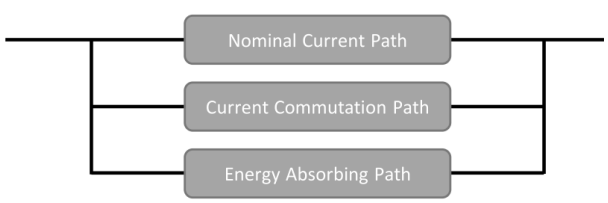

Fig. 2: General structure of common HVDC circuit breaker topologies [2].

The nominal current path (NCP) is optimized for low losses and consist of a mechanical ultra-fast disconnector (UFD) with a load commutation switch (LCS) or mechanical interrupters (MI). In case of a fault, the current is commutated in the current commutation path (CCP). The mechanical switch can open under zero current (UFD) or at zero crossing (MI) in the NCP. Afterwards, the counter voltage can be build up in the CCP. As soon as it reaches the grid voltage, further increase of the fault current is stopped. To bring the current to zero, the counter voltage needs to be increased further to transfer the current to the energy absorption path (EAP), where the magnetic energy of the grid can be dissipated. HVDC circuit breakers can be divided into several groups by their structure.

(Passive) oscillation switches (cf. Fig. 3) employ a mechanical interrupter in the NCP and an LC circuit in the CCP. As soon as the MI is opened, the arc voltage excites an oscillation with the parallel LC circuit. Using an MI with a negative voltage / current characteristic, this oscillation increases in amplitude and eventually creates a current zero crossing at which the MI can interrupt the current flow in the NCP. The fault current commutates into the CCP, where it charges the employed capacitor and builds up the counter voltage. While the principle is simple, it is challenging to design a switch that employs a negative voltage / current characteristic for high currents. The same applies for realizing a sufficient amplification to reach a fast zero crossing. To speed up this process, an active oscillator can be included in the CCP [7].

Passive oscillation topologies are commonly used for metal return transfer switches, e.g. in 800 kV and 1100 kV connections with load currents above 5 kA [1]. Due to improved speed, the topology with active oscillation seems suitable for interrupting fault currents. Successful tests for a 40kV module, breaking a peak current of 10.8kA have been reported [7].

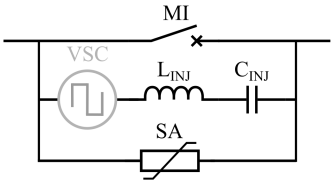

Fig. 3: Passive oscillation / active oscillator (including VSC) topologies.

Current injection topologies employ a similar circuit, but use a pre-charged capacitor and an activation switch in the CCP (Fig. 4, left) or inductive coupling and a second resonant circuit (Fig. 4, right). While this increases the complexity of the assembly, current interruption in the NCP can be realized in less than a quarter period. This gives a considerable advantage in interruption speed. A drawback of the current injection principle is that the injected current is independent of the fault current. For small fault currents, this results both in a steep current zero crossing in the MI as well as a high remaining voltage on the injection capacitor. After current zero crossing in the MI, remaining charge in the injection capacitor charges the stray capacity of the MI via the injection inductance. This results in increasing voltage gradients across the MI for decreas-

ing fault currents. Consequently, low fault currents can be more challenging to interrupt for current injection topologies than higher fault currents. This effect can be reduced or compensated by introducing additional components to the CCP or NCP [8]-[9].

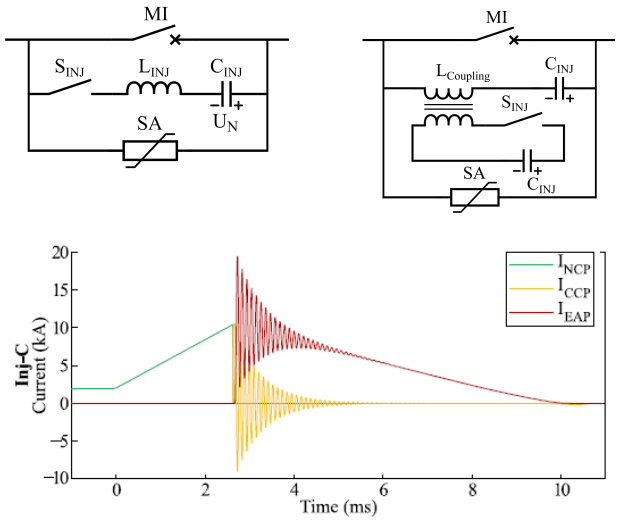

Fig. 4: Current injection topology (left: charged capacitor, right: coupled inductor) and waveforms for current interruption of charged capacitor topology [2].

The topology has been under investigation from the early stages of HVDC circuit breaker research on [4], [10]-[11]. Recent prototypes have successfully interrupted peak fault currents of 16 kA without specified voltage (charged capacitor, [12]) and 9.2 kA at 160 kV (coupled inductor, [13]).

Circuit breakers with UFDs typically employ a small load commutation switch (LCS) in the NCP as well. This consists of a small number of fully controllable semiconductor switches and parallel surge arresters to create a commutation voltage. These topologies are often referred to as hybrid breakers [1], [14], as they combine the use of mechanical and semiconductor switches (which however can also be the case in current injection topologies). Once the current is commutated by turning off the LCS, the UFD can be opened without current flow. The voltage drop across the CCP has to be kept below the voltage withstand capability of the opening UFD. Once the UFD reached sufficient contact separation, the counter voltage can exceed the grid voltage and finally transfer the current into the EAP.

The counter voltage in the CCP can either be generated by a semiconductor stack with sufficient voltage withstand or by (subsequentially) charging capacitors (Fig. 5).

An 80 kV [14] as well as a 200 kV rated prototype [15] of the hybrid topology have been successfully tested, reaching a peak fault current of 10kA and 15 kA, respectively. The later design has been installed in the Zhoushan grid [16]. In 2018, test results for hybrid breakers to be used in the 500 kV level (25 kA peak current) have been published [17].

A prototype of the hybrid breaker with successive capacitor charging with 120 kV rating and a peak fault current of 7 kA has been successfully tested [18].

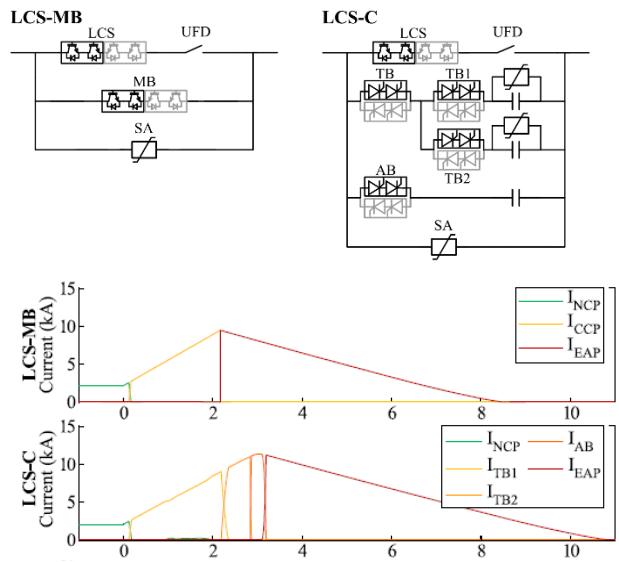

Fig. 5: Hybrid circuit breaker with semiconductor main breaker unit (MB) (left) and with successive capacitor charging (right) and respective fault interruption wave shapes [2].

The topologies introduced so far can be considered to be in an advanced state, as prototypes have been presented and high voltage / high power test results are available.

Besides these, a large number of topologies has been suggested based on simulations or small scale testing.

In the recent years, first small meshed high voltage VSC grids have been built. In 2013, a three terminal ±160 kV DC grid has been commissioned in Nan'ao, connecting several Chinese islands. The network connects offshore wind farms with the mainland grid and is based on MMC converters with power ratings between 100 MW and 200 MW. In 2018, China Southern Power Grid reported the successful commissioning and testing of mechanical HVDC circuit breakers in the Nan'ao MTDC network.

A 5 terminal ±200 kV network was implemented in 2014. Similar to the Nan'ao project, it connects several islands and connects wind farms to the Shanghai and Ningbo Power Grid. In October 2016, the successful type testing for the 200 kV hybrid circuit breaker to be

used in Zhoushan was announced by State Grid China Corporation. The circuit breakers (hybrid topology) were commissioned in Zhoushan in the following December [16].

The next milestone is the planned Zhangbei 4 terminal 500 kV network. With VSC converter stations up to 3 GW and line lengths of up to 200 km, this network will exceed the existing ones considerably. The network is planned to be built with 8 hybrid circuit breakers. Successful tests of a prototype circuit breaker have already been reported [17], [19].

Contribution of SCCER FURIES

In the framework of SCCER FURIES, there are several projects that contribute to the improvement of HVDC switchgear. All address the improvement of performance critical elements and do not aim at building full scale and complete prototypes.

- Injection topology type HVDC circuit breakers have been developed and pre-tested by some manufacturers. The major shortcoming of these solutions is the need for a large number of series connected vacuum breakers to clear the resulting steep current gradients. The present work (ETHZ HVL) aims at improving the performance of gas circuit breakers by controlling the current gradient in the microseconds before current zero (CZ). If this is successful, a single unit CB could be used in this type of topologies.
- A second type of injection principle with improved current gradient control before CZ is in investigation at ETHZ HPE. Also this concept is designed for single unit gas circuit breakers but the current gradient before CZ is actively controlled with IGBTs and the recovery voltage is limited by the use of diodes.
- In the area of switchgear using passive oscillation, a current project (ETHZ HVL) aims at optimizing the interrupter unit itself by controlling the voltage-current characteristic of the arc.
- Hybrid type HVDC circuit breakers have also been developed and pre-tested by some manufacturers. The key performance limiting element is the mechanical ultra-fast disconnector, which are currently all operated by a Thomson coil actuator. The present work (ETHZ HVL) aims at providing a completely new UFD technology with increased opening speed, minimum gap distance and low contact resistance in closed position.

Even though there are currently no specific short-term plans for HVDC grids in Switzerland and Europe, Swiss manufacturers (and vendors with manufacturing or research units in Switzerland) are currently actively working in the area of HVDC circuit breakers. These are: ABB, GE, and newly also Hyundai.

References

[1] Cigre Technical Brochure, "Technical Requirements and Specifications of State-of-the-Art HVDC Switching Equipment", 2017.

[2] T. Schultz, V. Lenz, and C. M. Franck, "Circuit Breakers for Fault Current Interruption in HVDC Grids," *Fachtagung Hochspannungstechnik*, 2016.

[3] V. Lenz, T. Schultz, and C. M. Franck, "Impact of Topology and Fault Current on Dimensioning and Performance of HVDC Circuit Breakers," *ICEPE-ST 2017 – 4th International Conference on Electric Power Equipment– Switching Technology,* 2017, pp. 356–364.

[4] W. Pucher, "Fundamentals of HVDC Interruption," *Electra*, vol. 5, pp. 24–38, 1968.

[5] A. Greenwood and T. Lee, "Theory and Application of the Commutation Principle for HVDC Circuit Breakers," *IEEE Trans. Power Appar. Syst.*, vol. PAS-91, no. 4, pp. 1570–1574, Jul. 1972.

[6] B. L. Damsky, I. Imam, and W. Premerlani, "A New HVDC Circuit Breaker System Design For -+ 400 kV," *7 IEEE/PES Transm. and Distr. Conference*, 1979., 1979, pp. 230–236.

[7] "7s DCCB module tested at KEMA" [online] Available: http://www.scibreak.com/2018/06/20/scibreaks-dccb-module-tested-at-kema/.

[8] T. Schultz, B. Hammerich, and C. M. Franck, "Improving interruption performance of mechanical circuit breakers by controlling pre-current-zero wave shape" *IET High Voltage Engineering*, 2018, accepted.

[9] T. Schultz, P. Herzog, and C. M. Franck, "Current Injection Circuit Breakers for HVDC: Overview on Improved Injection Circuits," *ICEPE-ST 2017 – 5th International Conference on Electric Power Equipment– Switching Technology*, 2019, to be published

[10] K. Arimatsu, et al., "Development and Interrupting Tests on 250kV 8kA HVDC Circuit Breaker," *IEEE Trans. Power Appar. Syst.*, vol. PAS-104, no. 9, pp. 2452–2459, Sep. 1985.

[11] S. Yanabu, et al., "Development of HVDC Circuit Breaker and its Interrupting Test," *IEEE Trans. Power Appar. Syst.*, vol. PAS-101, no. 7, pp. 1958–1965, Jul. 1982.

[12] K. Tahata et al.,"HVDC circuit breakers for HVDC grid applications," *IET Conference on AC and DC Power Transmission*, 2015, pp. 1–9.

[13] Z. Zhang, et al., "Research and Development of 160kV Ultra-Fast Mechanical HVDC Circuit Breaker," *Power Syst. Technol.*, vol. 07, 2018.

[14] M. Callavik, A. Blomberg, J. Häfner, and B. Jacobson, "The Hybrid HVDC Breaker - An innovation breakthrough enabling reliable HVDC grids," Technical Paper, 2012.

[15] W. Zhou, et al., "Development and test of a 200kV full-bridge based hybrid HVDC breaker," *EPE'15 ECCE-Europe – 17th European Conference on Power Electronics and Applications*, Geneva, Switzerland, 2015, pp. 1–7.

[16] "World's First Set of 200kV DC Circuit Breaker Successfully Commissioned," [online] Available: http://www.cepri.com.cn/release/details_66_771.html

[17] H. Pang and X. Wei, "Research on Key Technology and Equipment for Zhangbei 500kV DC Grid," *IPEC-Niigata 2018 – ECCE Asia – International Power Electronics Conference*, 2018, pp. 2343–2351.

[18] W. Grieshaber, et al., "Development and test of a 120 kV direct current circuit breaker," CIGRE Session, Paris, 2014.

[19] "NR's 500kV DC Circuit Breaker Passed KEMA Witness Test," [online] Available: http://www.nrec.com/en/news-content-421.html

HVDC Circuit Breakers: Testing methods and challenges

Abstract

HVDC technology is expected to play a vital role in the near future and its emergence will mark the beginning of a new era for the energy grid. As a result, an integral part of the future HVDC grid, the HVDC circuit breaker has recently received significant attention from the research community. However, due to the challenges associated with its design and development, the limits of the HVDC circuit breaker are yet to be explored. In this chapter, a flexible, modular high current source is presented. The source is intended to act as a hardware-in-the-loop testbench for future HVDC circuit breakers, by driving highly dynamic and arbitrary current waveforms through dynamic loads (e.g. DC arc).

Introduction

Currently, the world is at the start of a complete and fundamental transformation of the entire energy system: away from fossil and nuclear fuels and towards renewable energy sources. The role of electric energy is crucial in the future energy system and the required changes in the existing power system are numerous and partly very fundamental. Due to the large increase in distributed generation (e.g. rooftop photovoltaic systems), even the classical power flow direction from high to low voltage can be reversed at times. The placement of new types of components and changes in control philosophy are investigated to enable operation without major network extension investments.

The integration of large-scale renewable energy from remote locations, for Europe in particular offshore wind power, motivates the increased interest in HVDC links and networks. The HVDC technology is considered as the basis for meshed multi-terminal HVDC (MTDC) grids. Still, one of the major obstacles in realizing MTDC networks is the fault handling. In point-to-point systems, this is done by de-energizing the link. However, this is not an option for larger MTDC systems and dedicated fault clearing devices, i.e. HVDC circuit breakers (CBs), need to be realized.

The stresses (transient fault currents and voltages) are fundamentally different in DC compared to AC systems. This is basically due to the fact that the system impedance in AC is mainly the line and transformer inductance, whereas in DC this is only the very low system resistance. The rates-of-rise and peak values of the transient fault currents are much higher in DC than AC. CBs need to operate on time scales of ms (instead 10's of ms) and need to dissipate most of the energy stored in the system inductance during current interruption. Today, it is clear that the stresses are considerably different and more demanding, but due to the non-existing field experience they cannot be quantified, yet.

Up to now, the research and development focus was on AC switchgear while HVDC switchgear has been designed based on existing AC switchgear with some empirical adaptions. Moreover, one of the main challenges associated with the design and optimization of next generation HVDC CBs is the characterization of switching arcs. Arcs have found widespread applications such as lighting, welding, cutting, arc furnaces, and current interruption. If two metal contacts are separated when current flows through them, the current continues to flow and a switching arc is formed. If the arc plasma is sufficiently cooled at the next current zero crossing, the insulating state can be re-established and the current flow can be interrupted.

In general, models with different levels of detail can describe electric arcs. However, independent of the level of sophistication of the underlying model or fitting procedure, one fundamental problem hinders further significant improvements. This intrinsic problem is that the arc is characterized by a steady-state cooling power as well as a transient response time to changes in the current. The former parameter is determined best from stationary currents, i.e. for sinusoidal currents best around the peak amplitude, and the latter one for steep current gradients, i.e. best around current-zero. Consequently, in order to achieve high accuracy in measuring the switching arc characteristics, a fundamentally novel method was developed in [1]. Instead of fitting complex models to voltage measurements with sinusoidal test currents, complex test currents were applied and the evaluation of the voltage measurements is similar to step response analysis methods. For this method to be applied however, arbitrary test currents have to be created and applied to the arc in the test object [2].

Challenges and requirements

As a direct consequence of the above, flexible dynamic and low ripple current sources with a high output current capability (>10kA) and a controlled, arbitrary current waveform are considered to be key enabling elements in the design procedure of next generation

HVDC CBs [2]. In particular, these sources will enable more detailed investigation of the properties of the arc and lead to a better understanding of its fundamental behaviour, which in turn will allow the development of more accurate models. The key requirements of such a test current source are listed in Table I.

TABLE I
Specifications of the flexible current source

Parameter	Flexible current source	
	Stack module	Full-scale source
Output current	1.5 kA	30 kA
Output voltage	±10 kV	±10 kV
Current gradient rise/fall	>10 A/µs	>200 A/µs
Flat-top ripple	<100 ppm	<100 ppm
Flat-top accuracy	<100 ppm	<100 ppm
Load type	R/L/Dynamic	R/L/Dynamic
Current waveform	Arbitrary	Arbitrary

In [3], [4], test results acquired with such a flexible pulse current source (up to 3 kV and 3 kA) are shown. The source is based on a rather simple design, with a 3–phase interleaved buck converter. Despite its success, the current source is limited in current and voltage, which renders the use under real expected conditions in future HVDC networks impossible. In addition, the control of pulse current shapes is rather complicated and limited. In [5], a novel topology that could be used as a flexible high performance current source fulfilling the aforementioned requirements has been introduced. However, the relatively simple applied control method (interleaved PI control) limited the dynamic performance of the system and its robustness under load disturbances (e.g., fluctuating loads such as arcs).

Based on those experiences and results, a flexible, modular topology for generating high current pulses with high gradients during transient operation and ultra-low ripple during steady state has been presented in [6]. Fig. 1 shows a schematic of a single stack module of the topology, where a current-shaping converter, which controls the output current of the system, is used in series with a modular multilevel Marx-type converter (M3TC) in order to generate the required high output voltage. In [7], an advanced control system for the presented source is also discussed. Based on the presented simulations, the combination of an optimal design and a near-optimal control enables the use of the topology's full potential and ensures that the requirements are met without compromising the stability of the system.

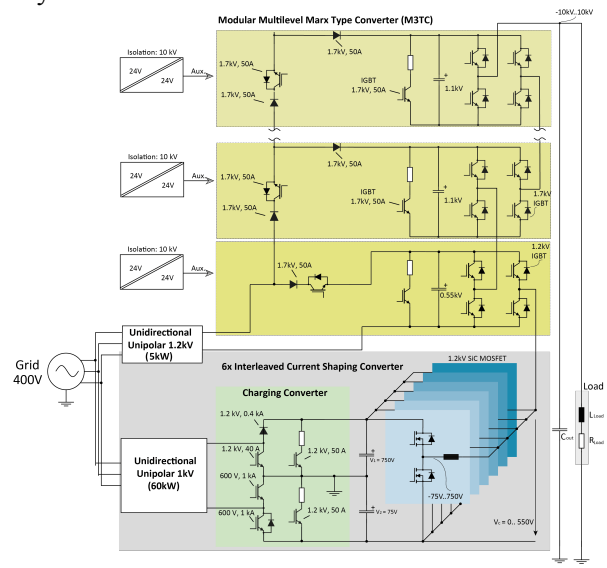

Fig. 1: Stack module of the proposed modular pulsed current source, with 1.5kA nominal current and ±10kV output voltage per stack. The full-scale source consists of 20 parallel stacks with a nominal current of 30kA.

Operation principle

At first, the current-shaping converter is responsible for controlling the current, shaping arbitrary current waveforms with a highly dynamic current. Additionally, the M3TC is responsible for generating a high staircase output voltage by inserting or bypassing the pre-charged capacitors. As current-shaping converter, a 6-phase interleaved buck-type converter is chosen For the M3TC converter, up to nine full-bridge modular multilevel converter stages are connected in series, consisting in principle a solid-state Marx-type generator. The M3TC is only responsible for the generation of the staircase output voltage, so its dynamics are relatively slow.

The basic operating principle of the current source is illustrated in Fig. 2. For generating, for example, a linearly rising output voltage V_{out}, first the converter output voltage V_c at t_0 is rising. At t_1, V_c reaches 0.5 V_{st}, which is the pre-charged value of the first stage of the M3TC. At that point, the first stage of the M3TC is turned on and VM3TC becomes $0.5V_{st}$, while V_c collapses to zero. As V_{out} continues to increase, V_c increases. At t_2, V_c reaches again to $0.5V_{st}$ and the first M3TC stage is turned off while the second stage, which is pre-charged to V_{st}, is turned on. Then, the voltage V_{M3TC} becomes equal to V_{st} and V_c collapses to zero. Likewise, at t_3, V_c reaches $0.5V_{st}$, the first M3TC stage is turned on, and VM3TC becomes $1.5V_{st}$.

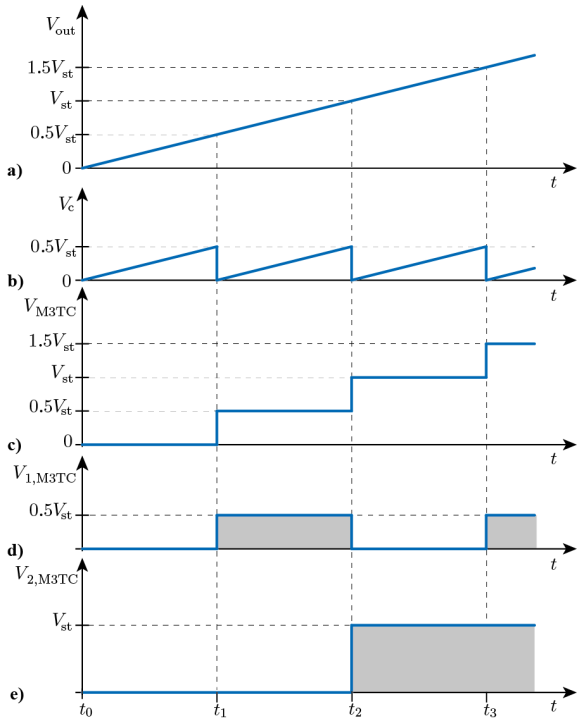

Fig. 2: Basic operating principle of the investigated current source. a) Output voltage V_{out}. b) Converter output voltage V_c. c) M3TC voltage V_{M3TC}. d) Voltage of the first stage of the M3TC. d) Voltage of the second stage of the M3TC [6].

Control of the Current Source Stack Module

In [7], an advanced multiphase hybrid controller that combines the time optimality of a hysteretic controller with the robustness of an average current controller is presented and its ability to exploit the maximum capabilities of the converter system both when it comes to its transient (maximum current gradient) as well as its steady-state (minimum current ripple) performance is shown. This interleaved hybrid controller for the multiphase DC-DC converters is used in the presented current source.

Fig. 3 shows an arbitrary current waveform for a 2Ω-10μH load. Initially, a ramp reference current with a gradient of 1A/μs is imposed and the average controller is enabled for the duration of this transient since there is no need for high dynamic performance. The module currents during these transients are interleaved, and the load current ripple remains low due to the additional phase-shifting controller.

In [2], the need for arbitrary current waveforms including staircase waveforms in order to study the step response properties of the arc has been noted. Likewise, Fig. 4 shows the performance of the current source while generating a staircase current waveform through a highly fluctuating load. The load in this case is simulated as a variable voltage source based on arc measurements performed at the High Voltage Laboratory at ETH Zurich. The simulated voltage waveform as a function of time can be seen in Fig. 4b. Despite the high-amplitude fluctuations, the combination of the robust design, and near-optimal control, results in a current that remains within the specified ±10% limits during flat-top operation and does not result in overcurrents that could potentially harm the converter system and trigger the protection systems. At the same time, the needed dynamic performance is met as shown in the zoomed-in version of the transient in Fig. 4a.

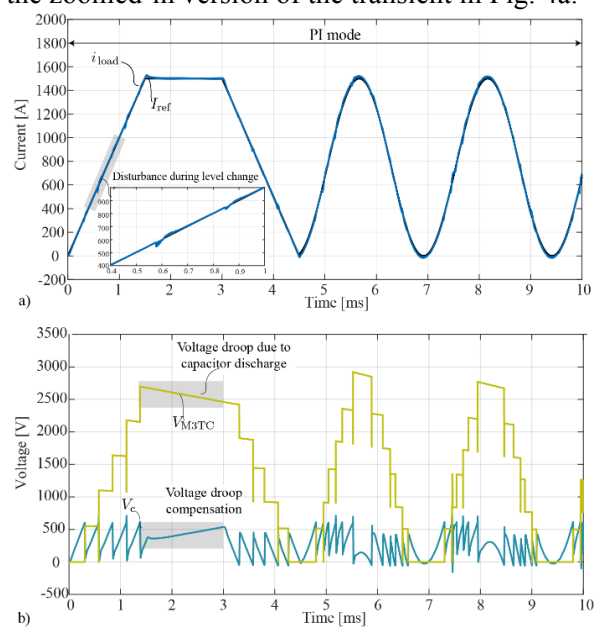

Fig. 3: Arbitrary current waveform generation driving a 2Ω-10μH load. a) Reference current (black) and load current waveform (blue). The PI controller is used in transients (slow ramp 1A/μs and 200Hz sinusoidal wave), b) M3TC voltage V_{M3TC} and converter output voltage V_c [6].

Current development status within the SCCER FURIES framework

At present, the discussed current source is under development at the Laboratory for High Power Electronics (HPE) at ETH Zürich. A single module of the current-shaping converter is shown in Fig. 5. The module is comprised of the gate driver board for the SiC MOSFET half bridge. Furthermore, the two inductor cores are connected in series to result in a more compact design and they are potted in order to improve the cooling performance of the system. The temperature of the winding is monitored online with thermocouples attached to the winding. Additionally, the high bandwidth current measurement board is shown in Fig. 5. The module has been tested in nominal power conditions and its operation has already been verified as shown in Fig. 5.

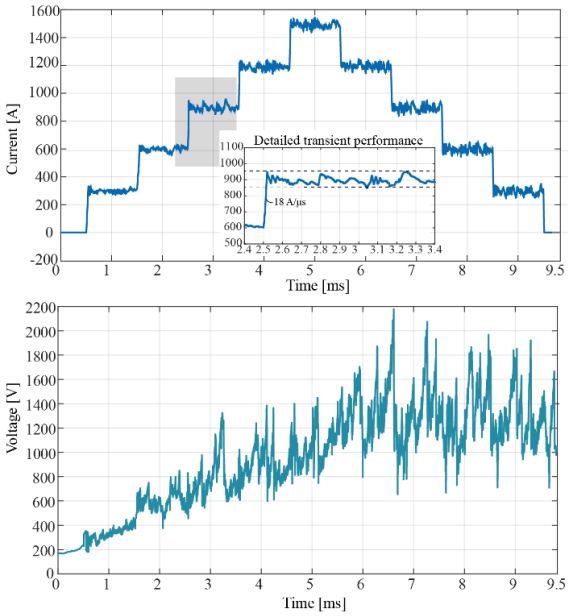

Fig. 4: Simulation results for a DC-arc load: a) Staircase output current waveform. Fast current pulses are generated while the fluctuations of the output voltage cause a relatively high current ripple. b) Simulated arc voltage [6].

Fig. 6 shows a picture of the assembled M3TC module. The module consists of the gate driver board that control the full-bridge converter, optical communication links for the exchange of data between the local M3TC module controller and the master controller and a capacitor board for achieving a lower parasitic inductance. The module has already been tested at its maximum ratings with switching tests.

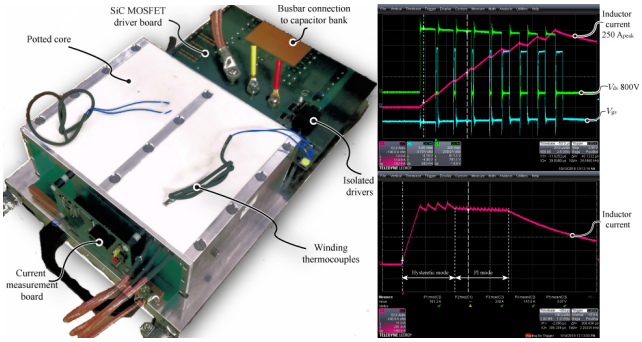

Fig. 5: Picture of one assembled module of the current-shaping converter and the resulting waveforms.

Anticipated development status by 2020

By the end of the project in summer 2020 a complete stack module is expected to be fully developed and tested, including the 6-phase interleaved current shaping converter, 4 M3TC stages for a maximum output voltage of ±4.5kV, the charging system for the capacitor banks and the top level control of the system. A drawing of the target system is shown on Fig. 7.

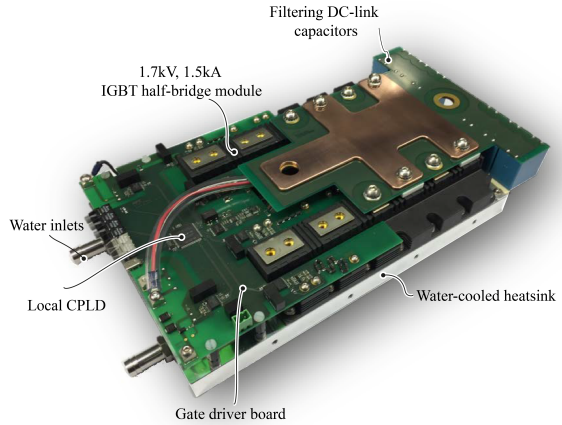

Fig. 5. Picture of the assembled module of the M3TC converter.

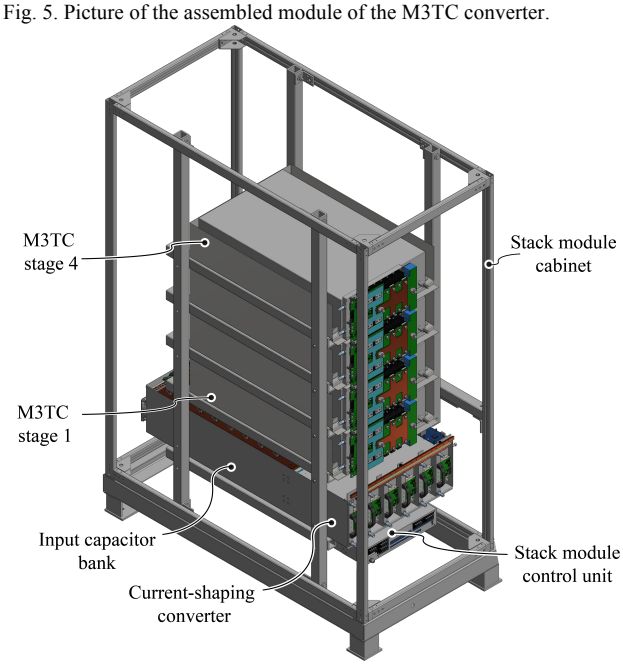

Fig. 7: Drawing of the under development single stack current source. Maximum voltage: ±4.5kV, maximum current: 1.5kA, maximum pulse duration: 10ms.

References

[1] M. Walter and C. Franck, "Improved method for direct black-box arc parameter determination and model validation," *IEEE Trans. Power Del.*, vol. 29, no. 2, pp. 580–588, Apr. 2014.

[2] C. M. Franck, "HVDC circuit breakers: A review identifying future research needs," *IEEE Transaction on Power Delivery*, April, 2011.

[3] A. Ritter, L. S. J. Bort, and C. M. Franck, "Five years of pulsed current testing for HVDC switchgear," *IEEE Int. Conf. High Voltage Eng. Appl. (ICHVE)*, pp. 1–4, Chengdu, China, 2016.

[4] M. M. Walter and C. M. Franck, "Flexible pulsed DC-source for investigations of HVDC circuit breaker arc resistance," in Proc. *Int. Conf. Gas Discharges Appl.*, pp. 1–4, 2010.

[5] Carstensen Christoph, "UnACuSo, A Unipolar Arbitrary Current Source for a Hardware-in-the-Loop Test Bench", PhD. Dissertation, ETH, Zürich, 2015.

[6] G. Tsolaridis, J. Biela „Flexible, Highly Dynamic, and Precise 30-kA Arbitrary Current Source", Trans. on Plasma Sci., 2018.

[7] G. Tsolaridis and J. Biela, "Interleaved hybrid control concept for multiphase DC-DC converters," *IEEE Energy Conv. Congr. Expo. – ECCE*, Cincinnati, OH, USA, 2017.

Fault location principles

Abstract

The fault location functionality is an on-line process of paramount importance required by power systems operation. It has a significant influence on the security (in transmission networks) and quality of supply (in distribution networks). We present in this chapter a summary of fault location techniques, with special reference to a newly-developed technique which is based on the theory of electromagnetic time reversal (EMTR). The EMTR-based approach can be equally applied to radial/meshed AC/DC power transmission or distribution networks, and compared to other Travelling Wave (TW) – based methods, irrespective to the size and complexity of the network, it requires only a single measurement point.

Introduction

Transmission and distribution lines are the backbones of power systems to transfer electricity between regions and from generation sites to consumers. These lines are prone to short-circuits due to faulty equipment, electrical insulation failures, human errors and weather-related events like falling trees, wind, and lightning activity. Power outages due to faults are expected to be amplified with the aging of transmission and distribution infrastructure along with the intensification of extreme weather events associated to the global climate change. These conditions require the availability of improved fault location methods in order to minimize the adverse impact of faults on power system security, reliability and quality of supply.

The fault location problem has been extensively studied in the literature. In transmission networks, the impact of this function on the grid operation is major and its performance are associated to the intrinsic topological complexity given by the meshed structure of these networks.

Dedicated fault location methodologies have been developed for the specific case of distribution networks with the main objective of improving the quality and reliability of the power supply provided to end-users. Despite the vast amount of literature, the problem of fault location still presents challenges for both transmission and distribution networks.

Transmission networks: the rapid growth in size and complexity of the transmission systems (e.g. integration of high voltage AC and DC systems) requires accurate and extremely rapid fault location methods. The reaction time of this function is fundamental in transmission grids with reduced inertia since the compression of the transmission line capacity subsequent to a fault, can have important impacts on the reliability of the bulk system (e.g., [1]).

Distribution systems: for this part of the electrical infrastructure, the fault location function is even more challenging due to following reasons (e.g., [2]-[3]).

- Distribution systems are often characterized by the presence of distributed generation units capable to have detrimental effects on the accuracy of fault location functions usually developed for passive distribution systems.
- Overhead lines of distribution systems are often characterized by a significant asymmetry between the phases. This asymmetry refers to the lines' electrical parameters as well as to the lines' power flows.
- The effect of the fault impedance on the fault location accuracy can be significant.

Loads currents, superimposed to the fault currents, can have asymmetric time-dependency during the fault.

Due to the critical importance of the fault location process in power systems, this problem has been extensively investigated since the 1950s (e.g., [4]) and numerous methods have been reported. The various methods can be classified in two main categories [2]-[3]: phasor-based methods and travelling wave-(TW) based methods.

Phasor-based methods

These methods generally rely on the computation of the impedance seen from a pre-determined observation point with respect to the fault location. The computation relies on the extraction of voltage and current phasors measured in correspondence of the observation point. The methods belonging to this category can be further classified into the following sub-categories: (i) single-terminal measurement methods (e.g., [5]-[6]), (ii) two-terminal measurement methods (e.g., [7]-[8]), and (iii) multi-terminal algorithms (e.g., [9]-[11]) that employ measurements from multiple ends of multi-terminal transmission lines. Two-terminal and multi-terminal measurement-based fault location methods can be based on either unsynchronized (e.g., [12]-[13])

or synchronized (e.g., [7]) voltage/current measurements.

Single-terminal measurements fault location methods estimate the fault distance by using voltage and current measurements at a particular end of the line. Intuitively, these approaches are simpler compared to two-terminal or multi-terminal measurement-based approaches. However, the solution of the fault location problem requires several assumptions and simplifications ([5]-[6]), which impact the fault location accuracy [14]. On the other hand, the methods based on two/multi-terminal measurements provide more accurate and robust fault location results compared to single-terminal methods. However, they may require communication links to exchange the data between multiple ends.

Despite the straightforward solutions provided by impedance-based fault location methods, as stated above, their accuracy might be affected by the fault resistance, configuration of the line, grid load flow unbalance, and the presence of DG units [3].

Traveling wave-based methods

Travelling wave-based methods have been increasingly investigated in the literature (e.g., [15]-[18]). These methods rely on the analysis of the high-frequency components of the fault-originated transient signals, which are slightly influenced by the fault impedance and the pre/post fault steady-state operation of the grid [19]. These methods are considered to be the most appropriate to identify fault location in DC transmission systems (e.g., [20]).

Travelling wave-based fault location methods analyze different features of the travelling waves and utilize various techniques such as cross-correlation between the forward and backward travelling waves (e.g., [16]), assessing the arrival time of the travelling waves at one (single-terminal) or different terminals of the line (multi-terminal) (e.g., [21]), and wavelet analysis (e.g., [19], [22]-[23]).

Despite the generally-acknowledged improved performance of the travelling wave-based methods compared to phasor-based ones, their accuracy might still be affected by the following factors [3]:

- Need for large number of measurement points
- Precise time stamping for methods requiring multiple synchronized metering stations.

Requirement of large bandwidth measurement systems.

New technologies development

To address the above challenges, a promising technology that is able to find the accurate fault location in complex power networks using a single measurement point has been proposed in [24]. The technology is based on the theory of Time Reversal (TR), which was proposed by Fink et al. in 1992 as a focusing process in acoustics [25]. The TR theory is founded on the time reversal invariance property of wave equations (e.g., in acoustics or electromagnetics). TR has been successfully applied to many areas of electrical engineering (see e.g., [26]).

Using the time-reversal invariance of the wave equations in transmission lines and confinement of the waves within the terminations of the network, an efficient method to locate faults in complex power network is proposed in [24]. It has been shown that the EMTR method can be equally applied to radial/meshed AC/DC power transmission or distribution networks, and compared to other TW-based methods, irrespective to the size and complexity of the network, it requires only a single measurement point. Furthermore, the accuracy of the method is robust against fault impedance and measurement noise [27]. In brief, the proposed method is based on the three steps.

i) *Forward propagation phase*: the fault originated voltage transient signals are recorded in a single measurement point.

ii) *Backward propagation phase*: as the main unknown is the location of the fault, a number of guessed fault locations (GFL) are pre-defined. The recorded signals are reversed in time and back-injected into the simulated network model from the same measurement point where they have been measured.

iii) *Fault location characterization*: the fault current at each GFL is calculated. According to the temporal and spatial correlation properties of the Time Reversal theory, the back injected signal will arrive in phase only when the GFL corresponds to the real fault location. Therefore, the fault current signal energy (FCSE) can be used as a metric to identify the real fault location.

By using the FCSE criterion, it has been shown that the EMTR process can be successfully applied for different types of power networks with inhomogeneous composition of lines (e.g., overhead and coaxial cables), radial distribution grids [24], series-compensated transmission lines [28], and multi-terminal HVDC

networks [29]-[30]. In addition, practical applications of the method have successfully demonstrated its effectiveness on a reduced-scale experimental setup realized by coaxial cables [24] and a full-scale experiment on an unenergized 677-m-long, double-circuit 10-kV overhead distribution line [31]. More recently, a promising pilot test was performed on a live medium voltage distribution feeder. The tested distribution feeder is operated with a resonant neutral consisting of 11.9-km long double-circuit (overhead) lines operating at 18/60 kV and multiple 18 kV three-phase laterals branching from the main feeder.

The proposed method of [24] relies on the inspection of multiple GFLs in the network. Thus, in order to accelerate the process, alternative methods in frequency domain using the argument of the voltage along the line [32] and using mirrored minimum energy property [33] have been proposed. In these methods, the transverse branch representing the fault is removed in the backward propagation phase. Thus, the process can be applied using a single simulation of the back-propagation model.

Contribution of SCCER FURIES

A research project aiming at the development of a single-station fault locating device for electrical power grid based on electromagnetic time reversal is currently carried out within the framework of the Work Package 3 of SCCER FURIES and thanks to financial support provided from Innosuisse and SFOE.

The aim of the project is in line with the objectives of the Swiss Roadmap towards a Smart Grid [34], especially the second challenge related to fault detection and location (page 17 of [34]).

The project is carried out in close cooperation with the Swiss Electrical Utility Groupe E and Streamer International. Thanks to the network of strategic FURIES partners, Streamer International is interested in commercializing the first fault location device based on time reversal and will target the MV grid operators both in Switzerland and abroad, which are the main expected clients of this technology.

References

[1] AEMO, "Review of the Black System South Australia report system event of 28 September 2016," Australian Energy Market Operator, Tech. Rep., 2017.

[2] M. M. Saha, J. J. Izykowski, and E. Rosolowski, *Fault Location on Power Networks*, vol. 25. Springer Science & Business Media, 2009.

[3] "IEEE Guide for Determining Fault Location on AC Transmission and Distribution Lines." 2005.

[4] T. W. Stringfield, D. J. Marihart, and R. F. Stevens, "Fault location methods for overhead lines," *Trans. Amer. Inst. Electr. Eng. III, Power App. Syst.*, vol. 76, no. 3, pp. 518–529, 1957.

[5] T. Takagi, Y. Yamakoshi, M. Yamaura, R. Kondow, and T. Matsushima, "Development of a New Type Fault Locator Using the One-Terminal Voltage and Current Data," *IEEE Trans. Power Appar. Syst.*, vol. PAS-101, no. 8, pp. 2892–2898, Aug. 1982.

[6] L. Eriksson, M. M. Saha, and G. D. Rockefeller, "An Accurate Fault Locator with Compensation for Apparent Reactance in the Fault Resistance Resulting from Remote-End Infeed," *IEEE Power Eng. Rev.*, vol. PER-5, no. 2, pp. 44–44, Feb. 1985.

[7] M. Kezunovic and B. Perunicic, "Automated Transmission Line Fault Analysis Using Synchronized Sampling at Two Ends," in Proc. *Power Industry Computer Applications Conference*, 1995, pp. 407–413.

[8] A. A. Girgis, D. G. Hart, and W. L. Peterson, "A New Fault Location Technique for Two- and Three-Terminal Lines," *IEEE Trans. Power Deliv.*, vol. 7, no. 1, pp. 98–107, 1992.

[9] T. Nagasawa, M. Abe, N. Otsuzuki, T. Emura, Y. Jikihara, and M. Takeuchi, "Development of a New Fault Location Algorithm for Multi-Terminal two Parallel Transmission Lines," *IEEE Trans. Power Deliv.*, vol. 7, no. 3, pp. 1516–1532, Jul. 1992.

[10] G. Manassero, E. C. Senger, R. M. Nakagomi, E. L. Pellini, and E. C. N. Rodrigues, "Fault-Location System for Multiterminal Transmission Lines," *IEEE Trans. Power Deliv.*, vol. 25, no. 3, pp. 1418–1426, Jul. 2010.

[11] T. Funabashi, H. Otoguro, Y. Mizuma, L. Dube, and A. Ametani, "Digital Fault Location for Parallel Double-Circuit Multi-Terminal Transmission Lines," *IEEE Trans. Power Deliv.*, vol. 15, no. 2, pp. 531–537, Apr. 2000.

[12] D. Novosel, D. G. Hart, E. Udren, and J. Garitty, "Unsynchronized Two-Terminal Fault Location Estimation," *IEEE Trans. Power Deliv.*, vol. 11, no. 1, pp. 130–138, 1996.

[13] J. Izykowski, R. Molag, E. Rosolowski, and M. M. Saha, "Accurate Location of Faults on Power Transmission Lines With Use of Two-End Unsynchronized Measurements," *IEEE Trans. Power Deliv.*, vol. 21, no. 2, pp. 627–633, Apr. 2006.

[14] C. E. M. Pereira and L. C. Zanetta, "Fault Location in Transmission Lines Using One-Terminal Postfault Voltage Data," *IEEE Trans. Power Deliv.*, vol. 19, no. 2, pp. 570–575, Apr. 2004.

[15] Y. G. Paithankar and M. T. Sant, "A New Algorithm for Relaying and Fault Location Based on Autocorrelation of Travelling Waves," *Electr. Power Syst. Res.*, vol. 8, no. 2, Mar. 1985.

[16] P. McLaren and S. Rajendra, "Travelling-Wave Techniques Applied to the Protection of Teed Circuits:- Multi-Phase/Multi-circuit Sytstem," *IEEE Trans. Power Appar. Syst.*, vol. PAS-104, no. 12, pp. 3551–3557, Dec. 1985.

[17] A. O. Ibe and B. J. Cory, "A Travelling Wave-Based Fault Locator for Two- and Three-Terminal Networks," *IEEE Trans. Power Deliv.*, vol. 1, no. 2, pp. 283–288, 1986.

[18] F. V. Lopes, K. M. Silva, F. B. Costa, W. L. A. Neves, and D. Fernandes, "Real-Time Traveling-Wave-Based Fault Location Using Two-Terminal Unsynchronized Data," *IEEE Trans. Power Deliv.*, vol. 30, no. 3, pp. 1067–1076, Jun. 2015.

[19] A. Borghetti, M. Bosetti, M. Di Silvestro, C. A. Nucci, and M. Paolone, "Continuous-wavelet transform for Fault Location in Distribution Power Networks: Definition of Mother Wavelets Inferred From Fault Originated Transients," *IEEE Trans. Power Syst.*, vol. 23, no. 2, 2008.

[20] Y. Zhang, N. Tai, and B. Xu, "Fault Analysis and Traveling-Wave Protection Scheme for Bipolar HVDC Lines," *IEEE Trans. Power Deliv.*, vol. 27, no. 3, pp. 1583–1591, 2012.

[21] D. J. Spoor and J. G. Zhu, "Improved Single-Ended Traveling-Wave Fault- Location Algorithm Based on Experience With Conventional Substation Transducers," *IEEE Trans. Power Deliv.*, vol. 21, no. 3, pp. 1714–1720, Jul. 2006.

[22] F. H. Magnago and A. Abur, "Fault location using wavelets," *IEEE Trans. Power Deliv.*, vol. 13, no. 4, pp. 1475–1480, 1998.

[23] A. Borghetti, M. Bosetti, C. A. Nucci, M. Paolone, and A. Abur, "Integrated Use of Time-Frequency Wavelet Decompositions for Fault Location in Distribution Networks: Theory and Experimental Validation," *Power Deliv. IEEE Trans.*, vol. 25, no. 4, pp. 3139–3146, 2010.

[24] R. Razzaghi, G. Lugrin, H. Manesh, C. Romero, M. Paolone, and F. Rachidi, "An efficient method based on the electromagnetic time reversal to locate faults in power networks," *IEEE Trans. Power Deliv.*, vol. 28, no. 3, 2013.

[25] M. Fink, "Time reversal of ultrasonic fields. I. Basic principles," *IEEE Trans. Ultrason. Ferroelectr. Freq. Control*, vol. 39, no. 5, pp. 555–566, Sep. 1992.

[26] F. Rachidi, M. Rubinstein, and M. Paolone, *Electromagnetic Time Reversal: Application to EMC and Power Systems*. Wiley, 2017.

[27] R. Razzaghi, G. Lugrin, M. Paolone, and F. Rachidi, "Electromagnetic Time Reversal Applied to Fault Location in Power Networks," *Electromagnetic Time Reversal*, Chichester, UK: John Wiley & Sons, Ltd, 2017, pp. 217–274.

[28] R. Razzaghi, G. Lugrin, M. Paolone, and F. Rachidi, "On the use of electromagnetic time reversal to locate faults in series-compensated transmission lines," *2013 IEEE Grenoble Conference PowerTech, POWERTECH*, Grenoble, France, 2013.

[29] R. Razzaghi, M. Paolone, F. Rachidi, J. Descloux, B. Raison, and N. Retière, "Fault location in multi-terminal HVDC networks based on Electromagnetic Time Reversal with limited time reversal window," *Power Systems Computation Conference, PSCC 2014*, Wroclaw, Poland, 2014.

[30] X. Zhang, N. Tai, Y. Wang, and J. Liu, "EMTR-based fault location for DC line in VSC-MTDC system using high-frequency currents," *IET Gener. Transm. Distrib.*, vol. 11, no. 10, pp. 2499–2507, Jul. 2017.

[31] Z. Wang et al., "A Full-Scale Experimental Validation of Electromagnetic Time Reversal Applied to Locate Disturbances in Overhead Power Distribution Lines," *IEEE Trans. Electromagn. Compat.*, vol. 60, no. 5, 2018.

[32] A. Codino, Z. Wang, R. Razzaghi, M. Paolone, and F. Rachidi, "An alternative method for locating faults in transmission line networks based on time reversal," *IEEE Trans. Electromagn. Compat.*, vol. 59, no. 5, 2017.

[33] Z. Wang, A. Codino, R. Razzaghi, M. Paolone, and F. Rachidi, "Using electromagnetic time reversal to locate faults in transmission lines: Definition and application of the 'mirrored minimum energy' property," *International Symposium on Electromagnetic Compatibility - EMC EUROPE* , France, 2017.

[34] Groupe de Travail Technologie, Feuille de route Suisse pour un réseau intelligent, Office fédéral de l'énergie, 2015.

Concluding remarks

It is demonstrated that due to significant advancement in DC technologies, a DC infrastructure has advantages over existing the AC infrastructure for various applications in all network layers. Thanks to DC transmission, the losses and consequently costs can be significantly reduced in both bulk power transfer for long distances and in low voltage applications such as building infrastructure (office blocks, shopping centers, DC districts), industrial installations, electric vehicles power stations. DC technologies allow increasing controllability, more effectively integrating renewable energy sources and pumped storage plants, interconnecting asynchronous networks etc. Nevertheless, it increase power system operation complexity and several research challenges should be overcame. In order to realize them the authors of this paper propose the following contributions and developments:

- MVDC systems allow better integration of decentralized supplies, increase the power of existing infrastructure, reduce lines visual impact and footprint, supply remote loads.
- Connection of DC terminals of the MMC to the MVDC network leads to MVAC output voltage at the AC terminals. Integration of line frequency transformer into MMC allows voltage adaptation for the AC grid and reducing number of components in the system. Despite these hardware modifications, control principles of the MMC are preserved and without significant modifications, all the known control algorithms can be deployed.
- To address the needs to interface two MVDC grids of different voltage level, while providing galvanic isolation and ability to operate in case of partial loss of supply, converter utilizing Scott Transformer Connection (STC) is proposed. The STC allows for creation of balanced three-phase voltage MMC-based single-phase converters are connected to STC on the high voltage side, while simple six-step operated inverter is connected on the three-phase side, providing lower output voltage.
- MMC-based MVDC amplifier, based on two MMC converters connected to separate windings of a 12-pulse transformer. It is able to provide fast dynamic output voltage control on the DC side is proposed to test MVDC technologies questioning MVDC network stability and interactions between converters.
- Flexible and scalable medium voltage MMC hardware research platform is has been developed in order to demonstrate effectiveness of MMC in various conversion scenarios. Due to the modularity of the design, various topological reconfigurations are possible allowing for the same hardware to be used for different application scenarios.
- Frequency domain models of network elements (including underground cables) were established in order to implement frequency and resonance mode analysis of the network. The modeling of the MMC converters in the frequency domain, providing the effect of the adjuster on the converter's own impedance as well as its injection of harmonic currents allows setting up a first procedure for evaluating the influence of DC lines in the presence of cable links in the network.
- A “grey-box” transformer model is proposed where stray capacitances are taken into account: across each winding, between the primary and secondary windings and between the primary winding and the neutral of the transformer.
- The methods allowing to identify resonance location are established.
- Gas circuit breakers performance improved by controlling the current gradient in the microseconds before current zero (CZ) is investigating. If this is successful, a single unit circuit breaker could be used in injection topology type HVDC circuit breakers.
- Single unit gas circuit breakers, where the current gradient before CZ is actively controlled with IGBTs and the recovery voltage is limited by the use of diodes, for injection principle with improved current gradient control before CZ is in investigation.
- Providing a completely new ultra-fast disconnector (UFD) technology with increased opening speed, minimum gap distance and low contact resistance in closed position for hybrid type HVDC circuit breakers is investigating.
- Current source creating arbitrary test currents is under development. The module has been tested in nominal power conditions and its operation has already been verified.

- A new technique based on the theory of Time Reversal (TR), that is able to find the accurate fault location in complex power networks using a single measurement point is proposed. The accuracy of the method is robust against fault impedance and measurement noise.

Even through there are currently no specific short-term plans for HVDC grids in Switzerland, HVDC could be interesting for the additional features they can add the AC grid, also in light of Switzerland's role as a transit corridor within the interconnected European System. DC options might also be in a good synergy with improved hydro storage plants (e.g. varspeed pumped-storage), which will increase the dynamic requirements on the existing power system. Swiss manufacturers and vendors with manufacturing or research units in Switzerland (ABB, GE and Hyundai) are currently actively working in the HVDC circuit breakers area.